HYPERLOOP

Critical Design Review

Celeste Bean, Connor Buckland, Ben Hartl,
Cameron McCarthy, Connor Mulcahey

UC SANTA BARBARA
engineering

INTRODUCTION

what is the competition?

- What is the Hyperloop?
  - Proposed transit between Los Angeles and San Francisco
  - Low pressure tube
- What are the requirements of the competition?
  - Levitating
  - Traveling a 1-mile tube
  - Braking safely at the end
  - Communicating telemetry wirelessly
  - Controlling the pod

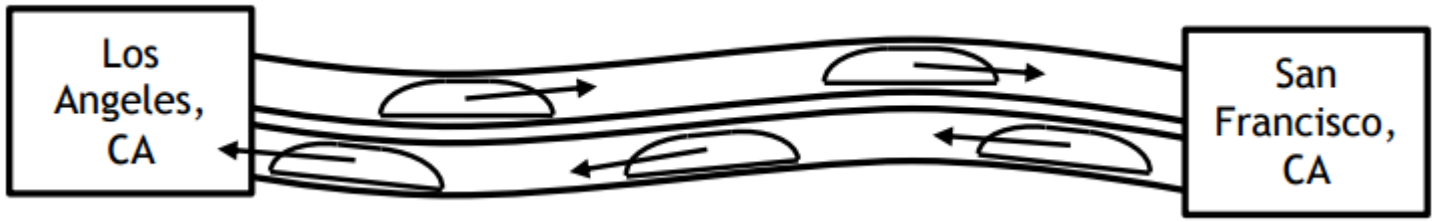

INTRODUCTION

tube

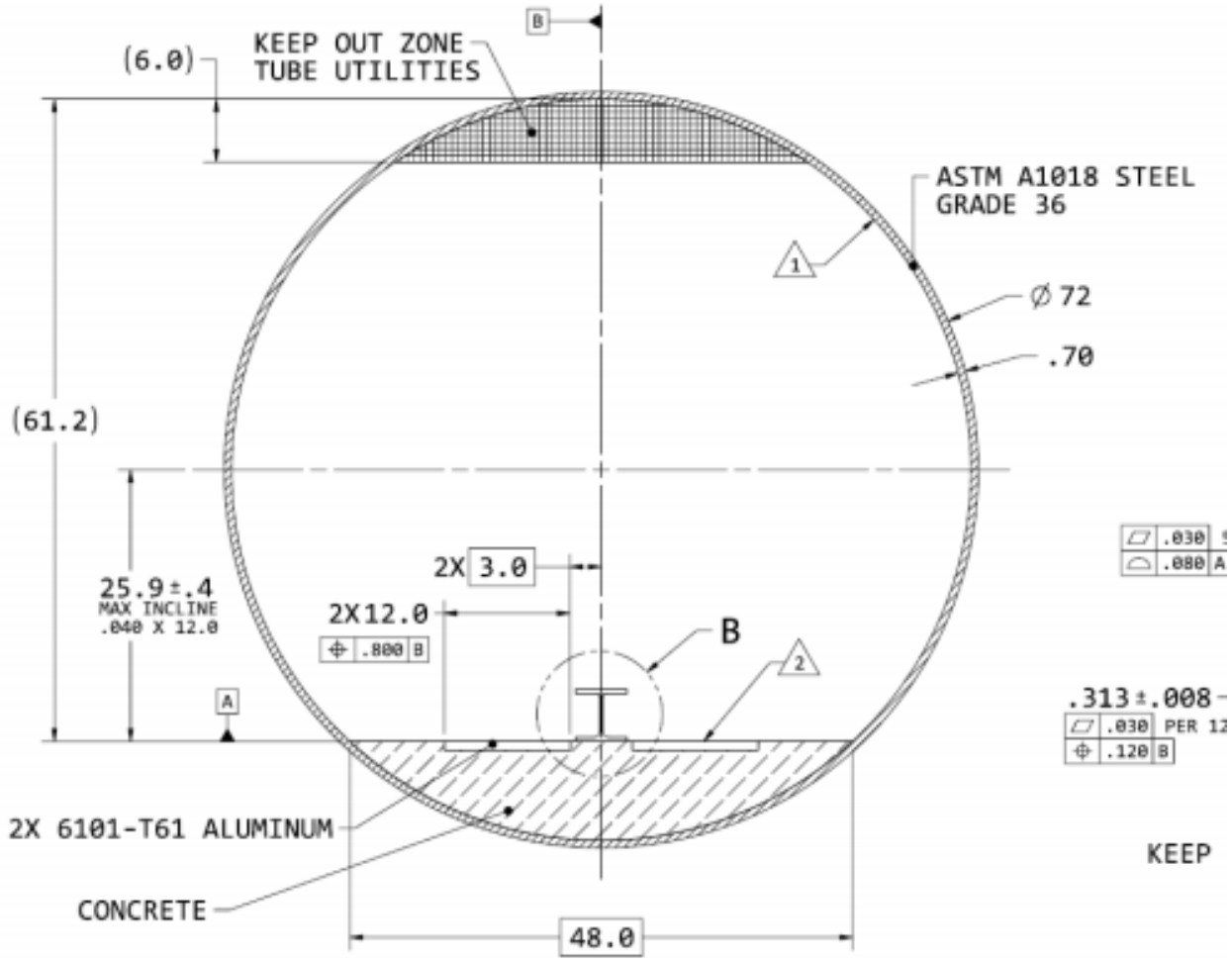

INTRODUCTION

pod concept

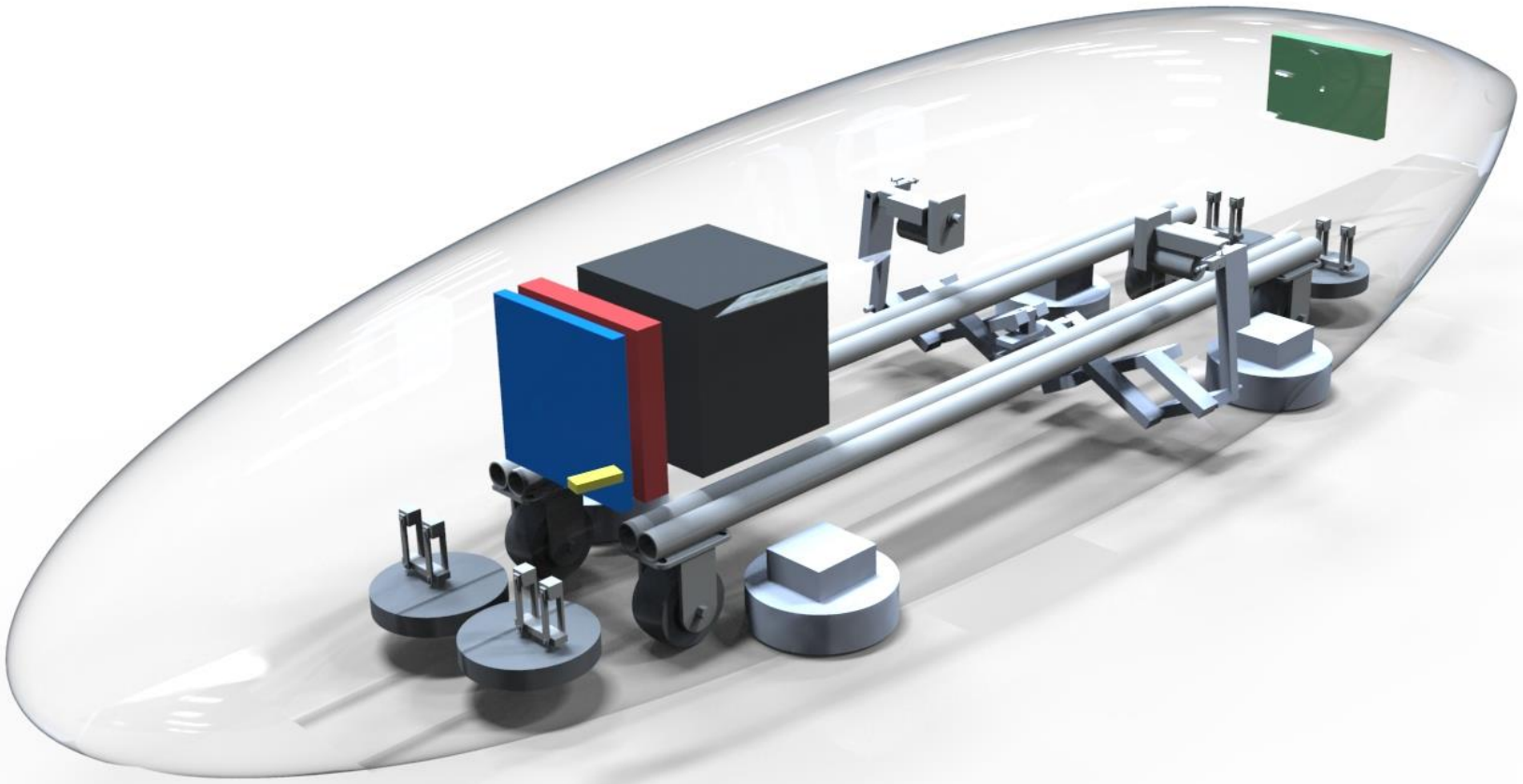

DEVELOPMENT TEAM

areas of expertise

- **Celeste Bean**: microcontroller, photoelectric sensors, control systems
- **Connor Buckland**: ranging sensors, accelerometer
- **Cameron McCarthy**: LCD screen, consolidated sensor
- **Ben Hartl**: barometer/thermometer, gyroscope
- **Connor Mulcahey**: WiFi, web application

INITIAL SPECIFICATIONS

competition requirements

- Wirelessly communicate at 1 Hz
  - Pressure
  - Temperature
  - Acceleration
  - Velocity
  - Position
  - Attitude
- Check the readiness of all systems and begin testing
- Manage stability/levitation/braking control systems
- Ensure emergency braking can activate

uCONTROLLER

LPC NXP4088

- Planning to use (2) 4088 microcontrollers
  - (1) includes all of our current requirements
  - (2) is allocated for unanticipated needs
- Has more than enough horsepower for our usages and integrates well with LPCOpen
- Plan on running both at 120 MHz
- Synced using a real time clock

SENSOR BOARD

10-DOF IMU Breakout

- Main source for telemetry
- Combines four sensors:
  - Temperature sensor
  - Pressure sensor
  - Accelerometer
  - Gyroscope
- Communicates via I2C
  - Memory-mapped addressing to specify component
  - Allows for selectivity in reading sensors

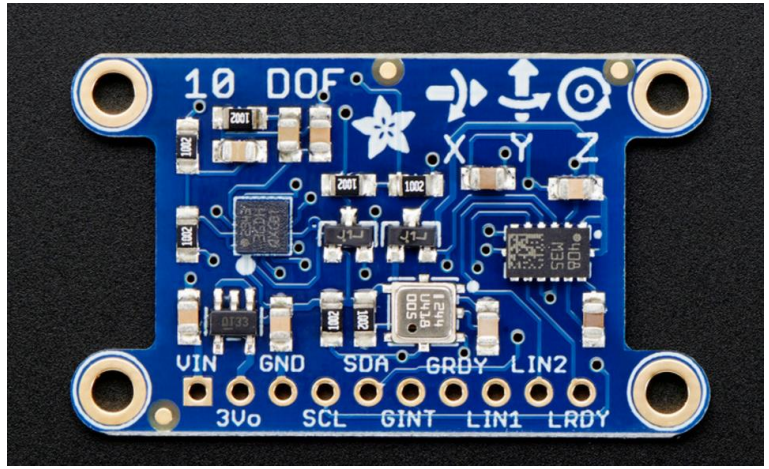

SENSORS

consolidated board

- **Accelerometer:** *LSM303DLHC*
  - Telemetry, navigation, and emergency braking
  - I2C access at data rates <5.376 KHz
  - Sensitivity: 1 mg/LSB at +/- 2G measurement range
- **Gyroscope:** *L3GD20*
  - Telemetry and stability control
  - I2C access at <400 kHz
  - Degrees per second (DPS): 250, 500, or 2000 DPS
- **Barometer/thermometer:** *BMP180*
  - Telemetry
  - I2C access at <3.4 MHz
  - Pressure range: 300 – 100 hPa
    - Accuracy: -4 hPa to + 2 hPa
  - Temperature range: 0°C to 65°C
    - Accuracy: ±1°C

LONG DISTANCE RANGING

GP2Y0A02YK

- Long distance ranging sensor for the pod's top and sides
  - Re-correlates estimated attitude with actual attitude
  - Gives position relative to sides of thee tube
- Accurate from 20 cm – 150 cm
- Analog output requires use of A/D converter for digital reading

SHORT DISTANCE RANGING

GP2Y0A51SK0F

- Short distance ranging sensor for the pod's bottom
  - Re-correlates estimated attitude with actual attitude
  - Gives position relative to sides of the tube
  - For stability/levitation feedback
- Accurate from 2 cm – 20 cm
- Analog output requires use of A/D converter for digital reading

PHOTOELECTRIC SENSOR

E3FB-DP13 2M

- Diffuse-reflective photoelectric sensor
  - Detects when reflected light is above a configurable threshold
  - Used to recognize the positional strips on the top half of the tube
  - Will recalibrate INS system
- Accurate up to 1 m
- 0.5 ms response time
- Analog output requires use of A/D converter for digital reading

LCD SCREEN

NHD-0416BZ-NSW-BBW

- Display sensor readings and initial start up checks during testing
- New character can be displayed every 600 nS
  - Writes by specifying cursor location and the character to be written there
- Decided more expensive option on the Development Kit was overkill

ETHERNET MODULE

WIZ820io

- Will communicate with SpaceX's Network Access Panel
  - SpaceX is providing a solution to communications problems
  - Requires a DB9 connector
  - Requires an Ethernet interface

BLOCK DIAGRAM

top-down design

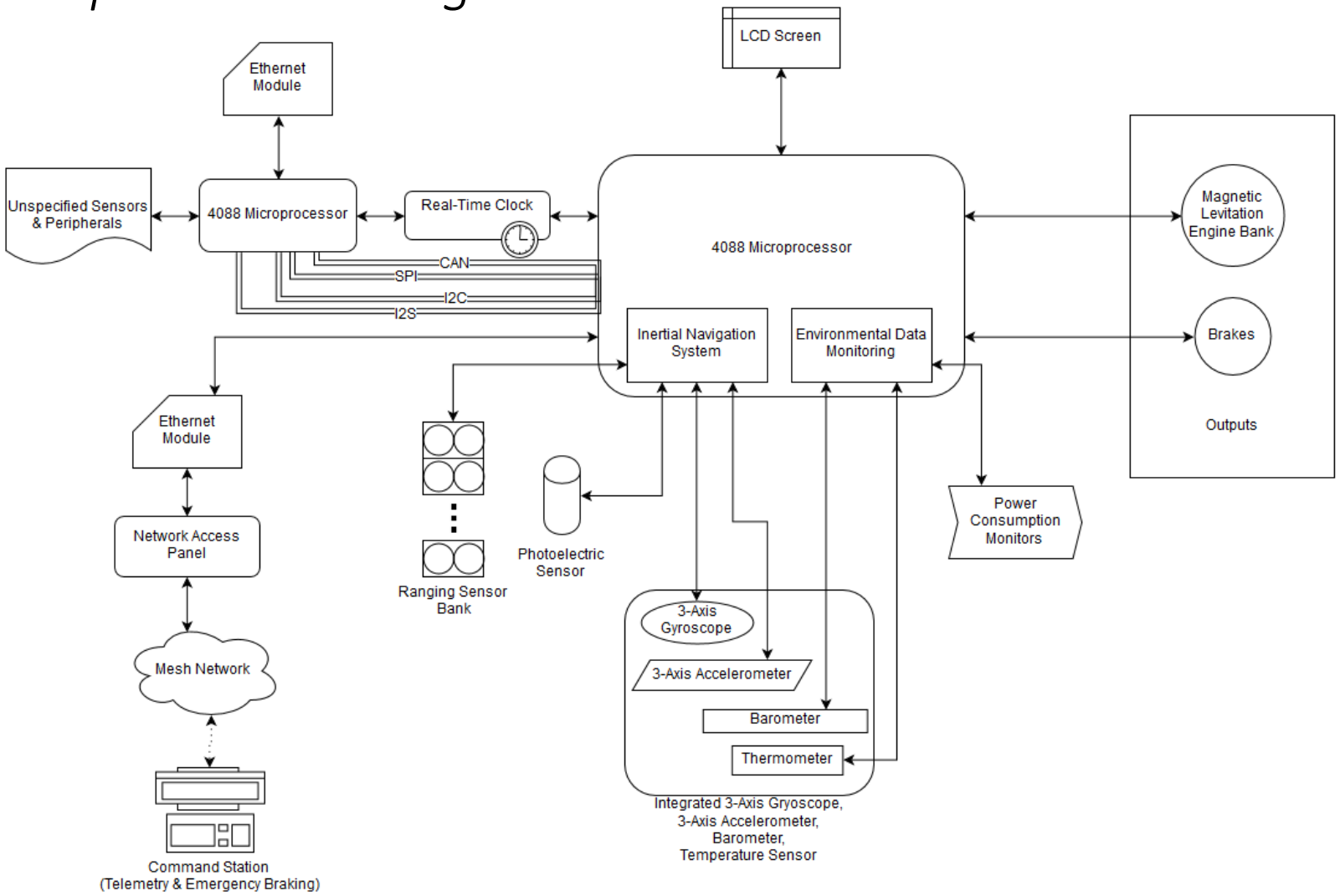

PRINTED CIRCUIT BOARD

schematic

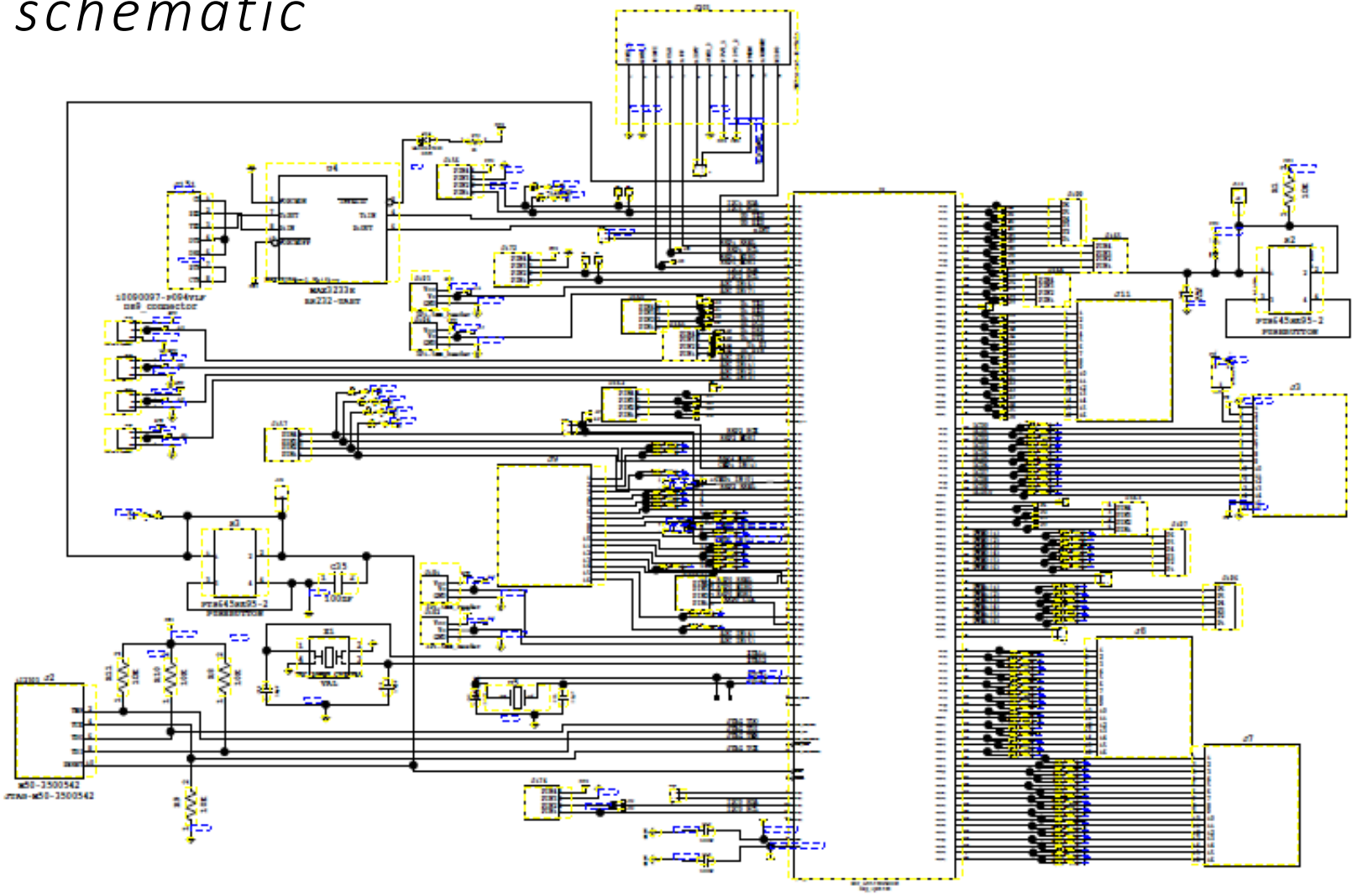

PRINTED CIRCUIT BOARD

physical layout

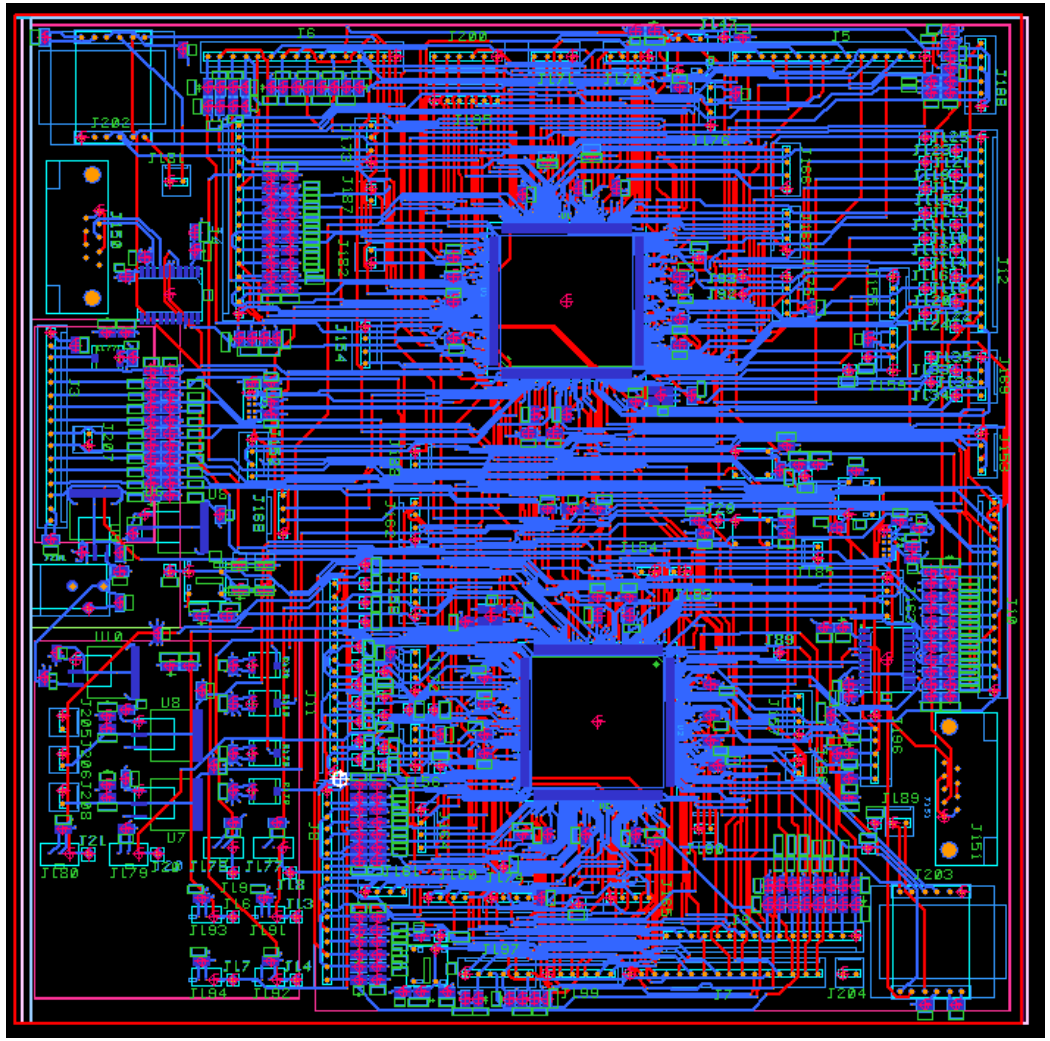

CONTROL SYSTEMS

stability

- **Closed feedback loop:**
  - 6 inputs
    - 2 gyroscopes at front and back of pod
    - 4 ranging sensors at bottom corners of pod
  - 4 actuators
    - Control each motor's levitation to maintain stability and correct disturbances

CONTROL SYSTEMS

navigation

- Tube will have reflective strips on upper half
  - 100 ft intervals
  - More condensed strips indicate 1000 ft and 500 ft left

- Dead reckoning
  - Double integrate **accelerometer**
    - Determines position between strips
  - Recalibrate with **diffuse-reflective photoelectric sensor**
    - Determines absolute position
    - Recognize the reflective strips on the top of the tube
    - Compensates for accelerometer integral drift

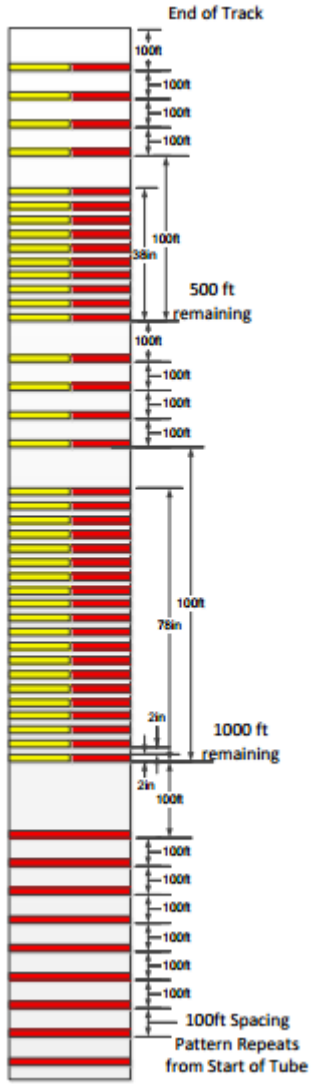

CONTROL SYSTEMS

braking

- Dynamic braking command
  - navigation system determines position in pod
- Hard-wired braking command
  - velocity profile determines exact time at which brakes should be applied

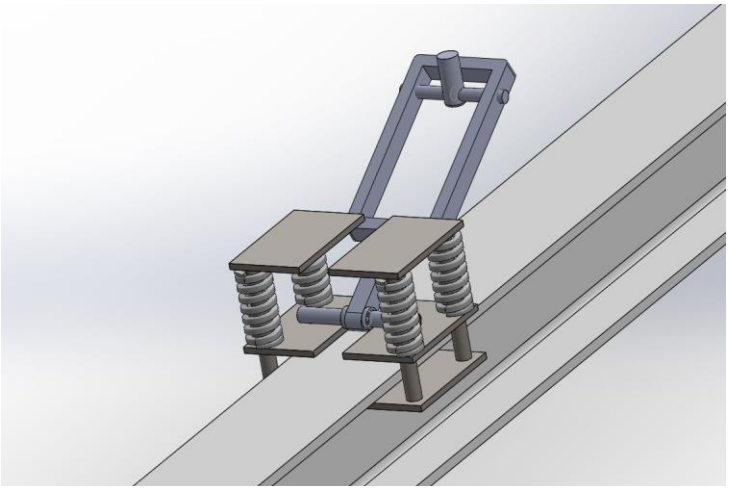

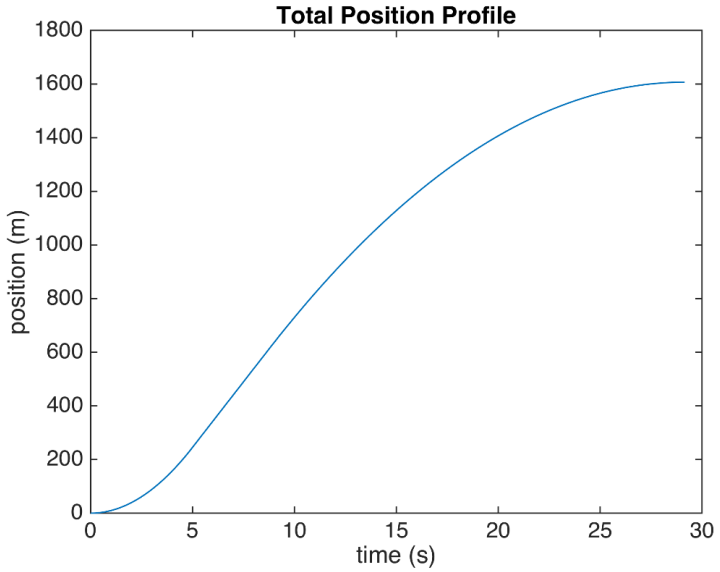

POWER DISTRIBUTION

- Electrical Engineering team suppling 8V to our PCB
  - 5V analog, 5V digital, 3.3V analog, 3.3V digital, and an isolated 3.3V digital line
- Photoelectric sensor will be handled separately

	Components	Supply Voltage
Onboard electronics (telemetry, controls, and wireless communication)	Photoelectric sensors (2)	12 V
	Gyro/Accel/Temp/Press (2)	5 V
	Long ranging sensors (6)	5 V
	Short ranging sensors (4)	5 V
	LCD Screen (1)	5 V
	uController (2)	3.3V
	Ethernet module (1)	3.3 V

CRITICAL ELEMENTS

potential points of failure

- Short distance ranging sensor
  - Pod needs to know how far it is from the bottom of the tube
  - Could stray too far and derail
  - Could drop too low and scrape the bottom of the tube
- Photoelectric sensor
  - Pod needs to know its position relative to the end of the tube
  - Will feed data back to slow down
- Accelerometer
  - Pod needs to know how fast it is moving to anticipate braking requirements

TECHNOLOGY/IP REUSE

existing efforts

- Developing on the NXP LPC4088 Developer's Kit
- Using LPCOpen
  - Open source libraries and code
- Consolidated sensor board has associated template code
- LCD Screen has associated code

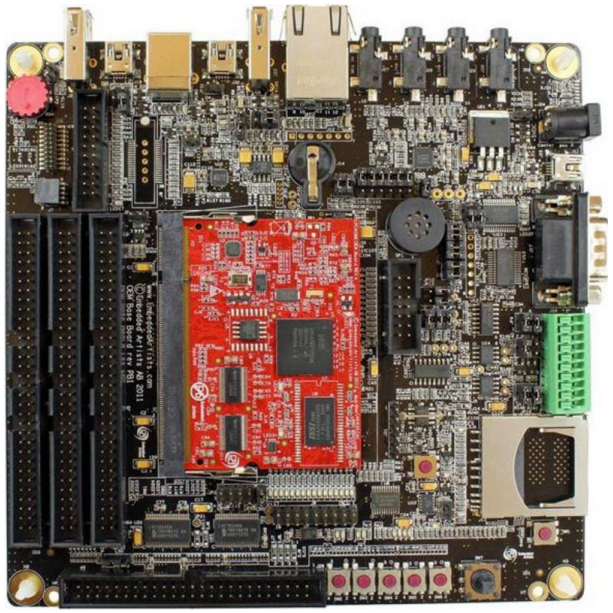

BILL OF MATERIALS

tentative budget

- Please see attached documentation.

CONCLUSION

- Moving forward
  - Winter quarter
    - Prototyping our sensors using the 4088 Developer's Kit
    - Developing website
    - Attending the SpaceX Design Weekend in January
  - Spring quarter
    - Integrating our testing into our PCB
    - Developing controls systems

- Thank you to Dr. Johnson and Will Miller for their patience and guidance.

- Questions?