ECE 189A Senior Capstone

December 16, 2014

Team Leader: Will Miller

Charles Crain, Isaac Flores, Brian Phan, Sarah Pilkington

INFINITABLE CRITICAL DESIGN REVIEW

Agenda

- Project Overview
- Parts
- Power Distribution
- Schematic and Bill of Materials
- Questions and Comments

Product Description

- InfiniTable is a fully interactive, multifunctional table made up of individual tiles that can be connected in any configuration desired by the user.
- There will be intelligence on each tile supporting a multi-functional sensor array working in tandem with a programmable LED array to provide a fully interactive and responsive experience.
- The system is controlled by an LCD touchscreen, and also features Bluetooth capabilities so the user can remotely control the table, or stream music from a personal smartphone.

Product Development Team

- Will Miller: Processor, PCB Power Requirements, WiFi Module
- Charles Crain: Bluetooth Module, MP3 Converter, Software development
- Isaac Flores: Tile Interfacing, LED and Sensor Addressing
- Brian Phan: Android Application, Force Sensors and Tile layout
- Sarah Pilkington: LCD Touchscreen, LED design/layout, User Interface

Applications

- Current application: Platform for popular party games, but there are many more practical applications
  - Games
    - Board Games, Table-top Games
  - Flooring
    - Light-Up/Force-sensitive tiling for homes and businesses
  - Security
    - Alerts to a change in force if something is moved or removed

Block Diagram

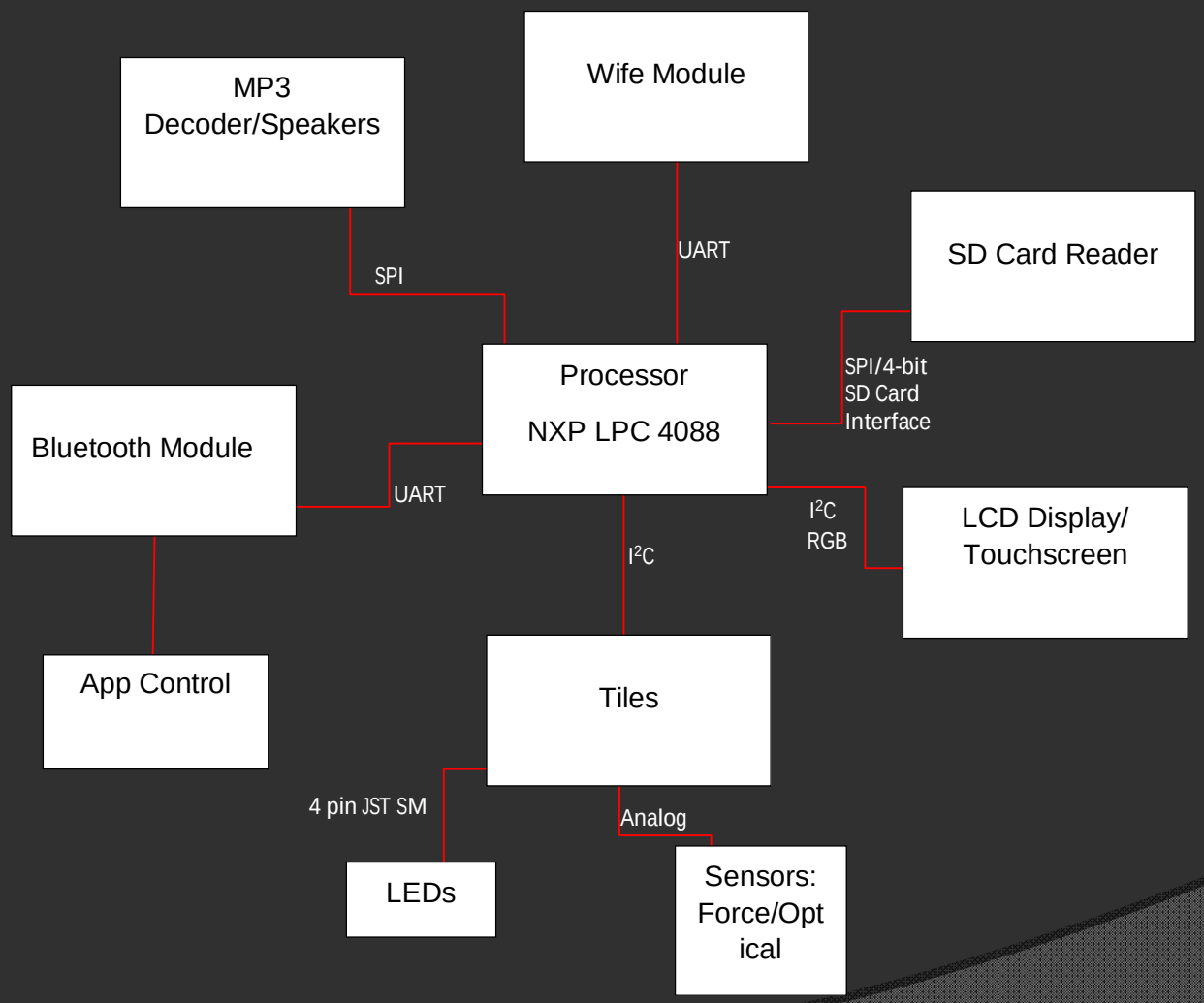

Subsystem Definitions

- Tiles (Isaac & Brian)
  - Can be connected in any configuration desired by the user
- Sensors (Isaac & Brian)
  - Force sensors: measure the force from the die when it hits the table
- LEDs (Sarah)
  - Visual representation of the information gathered by sensors
  - Pulse/change color to the beat of the music

Subsystem Definitions (II)

- LCD Touchscreen (Sarah)
  - User interface used to control the system
- Android Application (Brian & Charlie)
  - Redundant path for the LCD user interface
- Bluetooth Module (Brian)
  - Connect cellular device through Bluetooth in order to play music and to use the Android Application
- WiFi Module (Will)
  - Redundant path for the Bluetooth Module

Subsystem Definitions (III)

- MP3 Decoder (Charlie)
  - Enable system to play music through a Bluetooth connected cellular device
- SD Card Reader (Charlie)
  - Storage for pre-recorded game sounds and music, and pre-configured game designs

Parts – Processor

- NXP LPC4088
  - 512kB Flash
  - 96kB RAM
  - 120MHz Clock Speed
  - Supply Voltage: 2.4-3.6 V
  - UART, I^2C, SPI, I2S, USB Interfaces
  - 109 GPIO pins

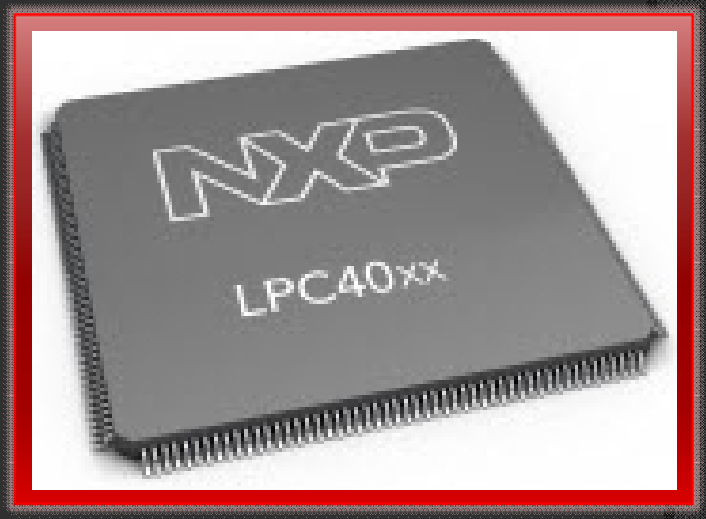

Parts – Processor (II)

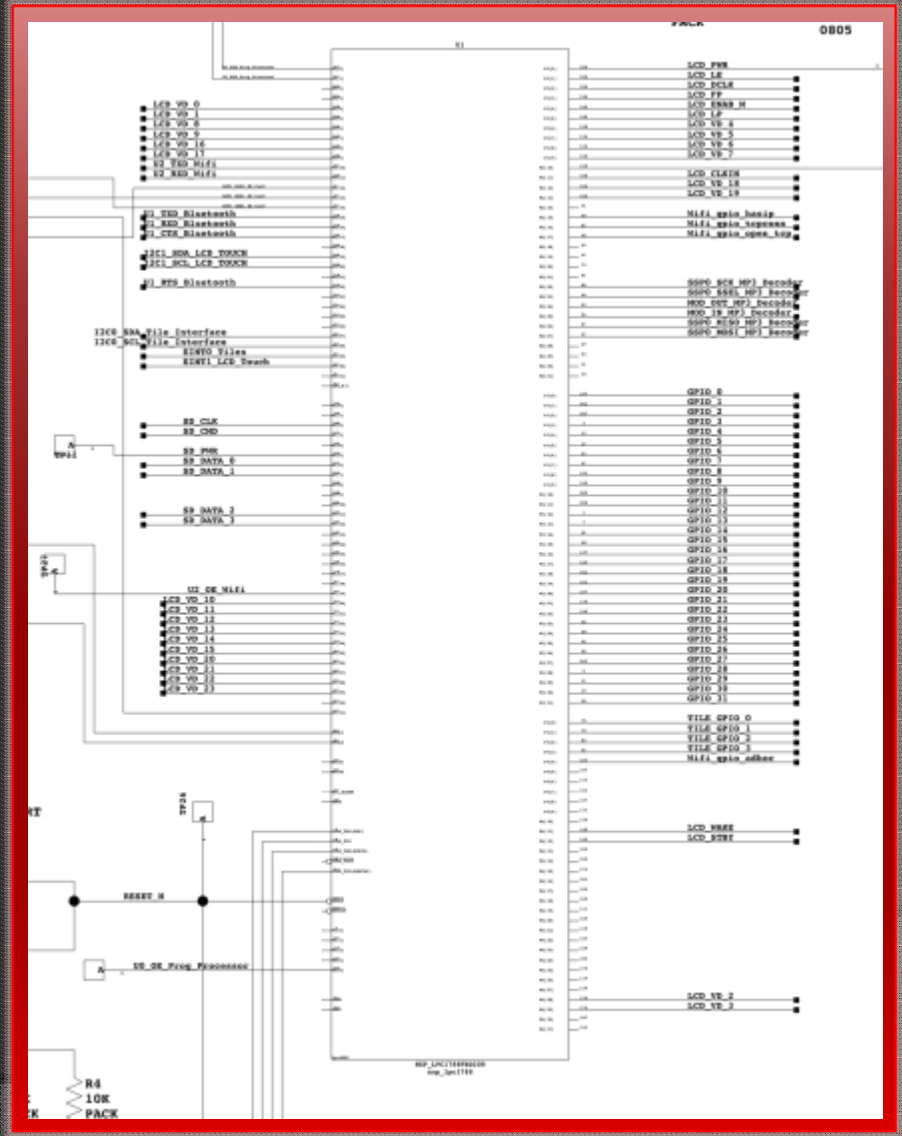

Parts – Tiles: Block Diagram

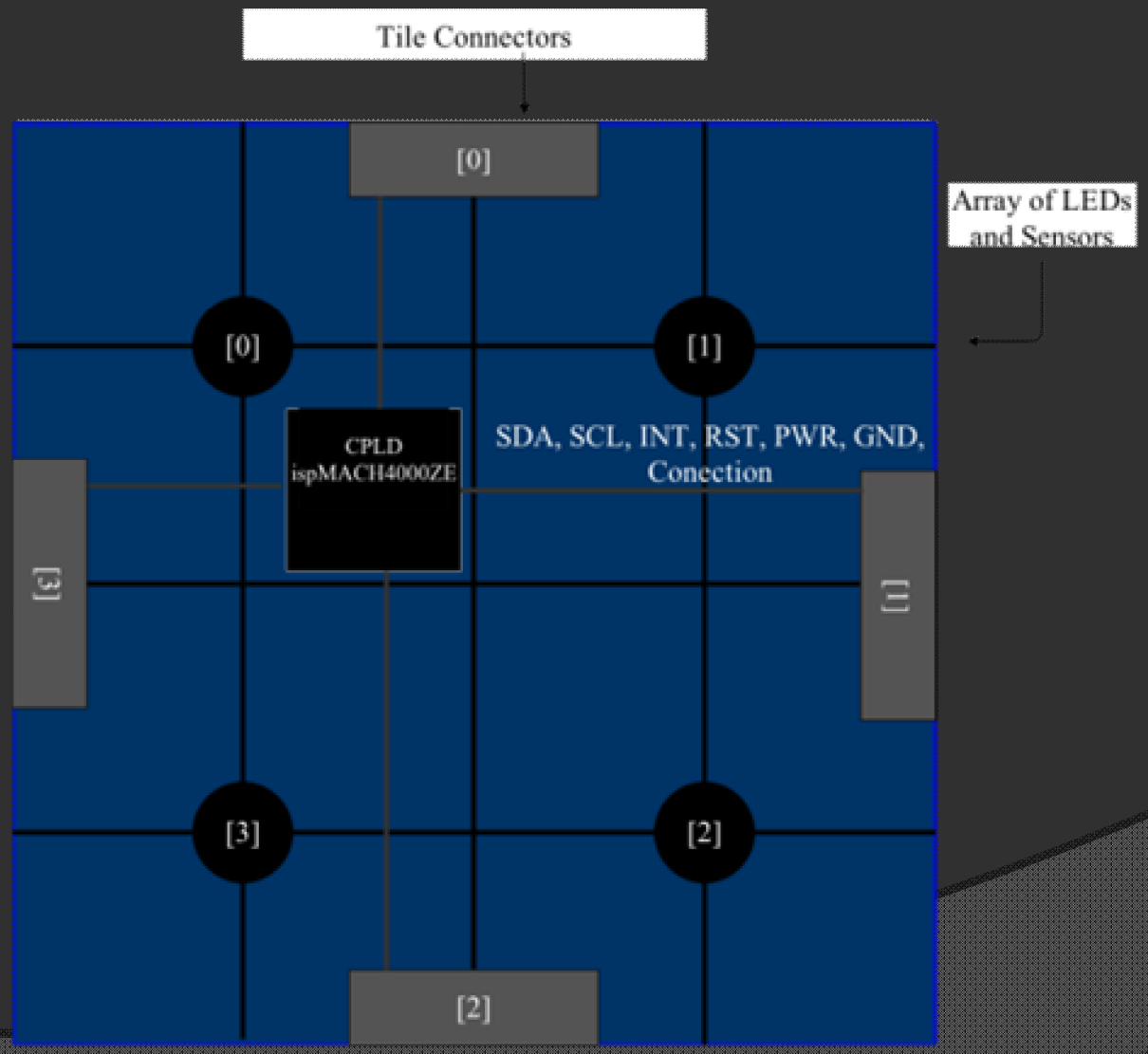

Parts – Tiles: Components

- Tile Components:
  - Wire-to-board connector
  - CPLD Breakout board
  - Breadboard
  - USB Connector
  - LEDs
  - Force Sensors
- Software Structure
  - Verilog
  - C/C++

Parts – Tiles: Connector

- Wire-to-board connector
  - Molex Pico-Lock
  - 10 pins
  - Wires add flexibility for connections to tile
- Female Contacts
  - 24-28 AWG
- 10 wire ribbon cable
  - 28 AWG

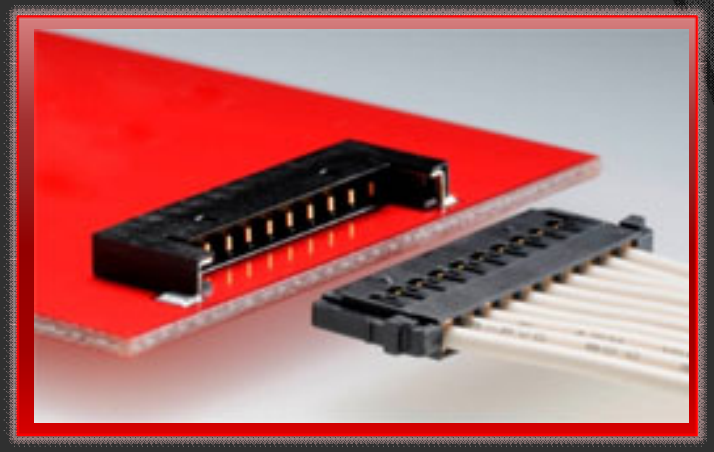

Parts – Tiles: Breakout Board

- ispMACH 4256ZE Breakout Board
  - USB mini-B connector for power and programming
  - 4x15 prototype area
  - Four 2x20 expansion board
  - Power Supply
    - 5V USB
    - Board regulates to 1.8V and 3.3V
  - Operating Power Supply Current
    - CPLD Typical: 372 µA
    - Rest of board: not specified

Parts – Tiles: CPLD

- ispMACH 4256ZE CPLD
  - Power Supply
    - 1.8V
  - Operating Power Supply Current
    - Typical: 372 µA
  - 144 TQFP, 20x20 mm
  - Supported on ispLever Classic 3.1
  - Number of Macro Cells: 256
  - Max Delay time: 7.5 ns
- LED and Sensor interface
- I^2C Slave

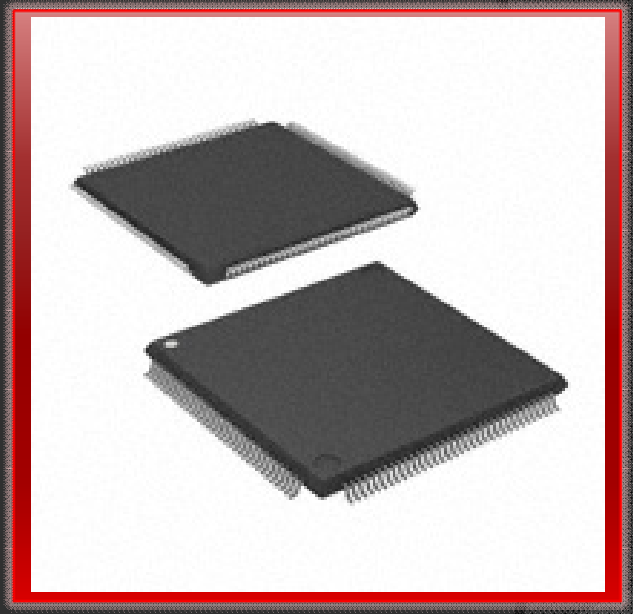

Parts – Tiles: I^2C Slave Module

- Lattice Semiconductors I^2C Slave Module
  - Reference Design 1054 based on I^2C Bus Specification version 2.1
  - Verilog
  - Software programmable slave address
  - Supports clock stretching as handshake
  - Supported on ispMACH 4256ZE
    - Utilizes 48 Macrocells and 26 I/O pins
    - Max frequency: >15MHz
    - Parallel I/O

Parts – Tiles: I²C Slave Module (II)

- Parallel Data Interface
  - Module performs parallel to serial conversion
- Clock Stretching
  - Low ready signal keeps SCL low

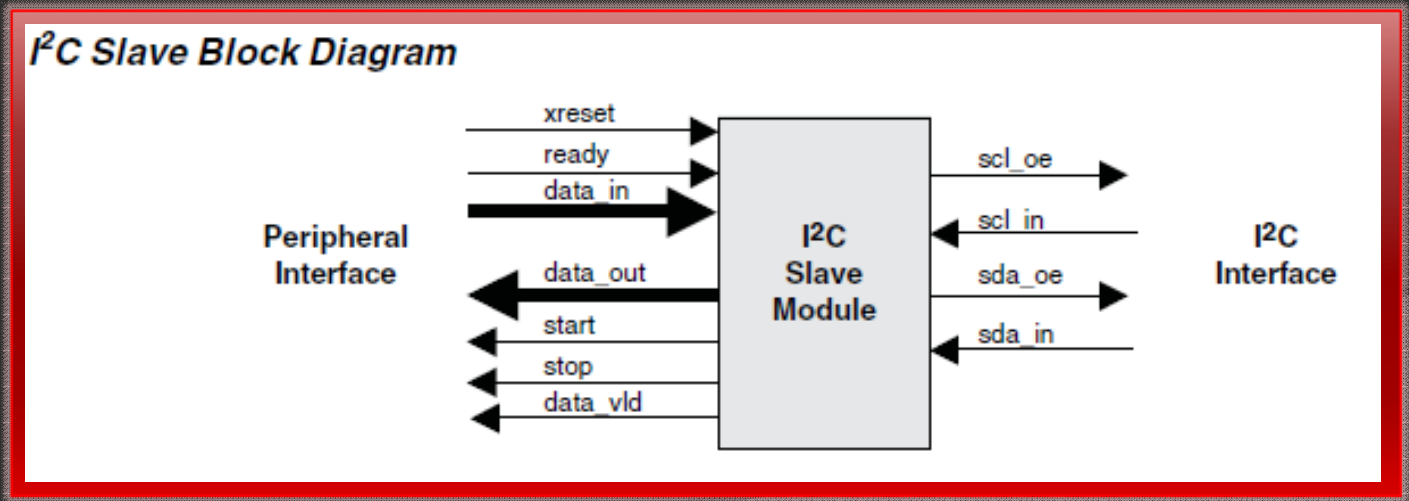

Parts – Tiles: I²C Slave Module (I

- 10 wire bus
  - SDA
  - SCL Power
  - Ground
  - Interrupt
  - Reset
  - GPIO_0
  - GPIO_1
  - GPIO _2

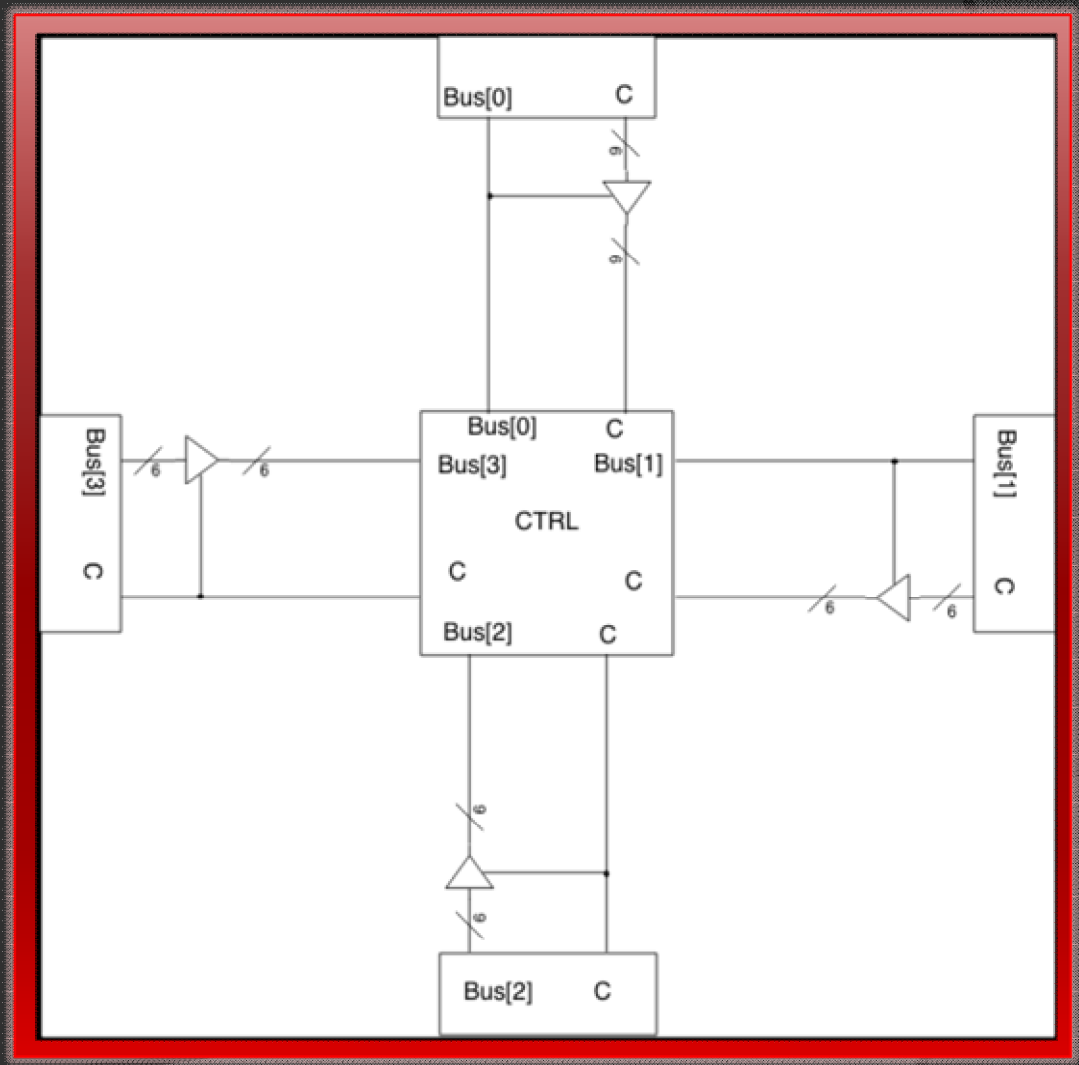

Parts – Tiles: Breadboard

- Breadboard
  - 3.2 L x 2.08 W inches
  - Provides greater flexibility
- USB Connector
- Force Sensor Circuitry
- Additional parts

Parts – Tiles: USB Connector

- USB Connector
  - Power Supply to Breakout board from 5V power line
  - Ground serial data lines
  - Through hole mount

Parts – Tiles: Interface Structure

- Hardware Structure
  - CPLD
  - 10 wire bus
  - USB Connector
- Software Structure
  - Verilog/C instruction
  - Event Handler

Parts – Tiles: LED/Sensor interface

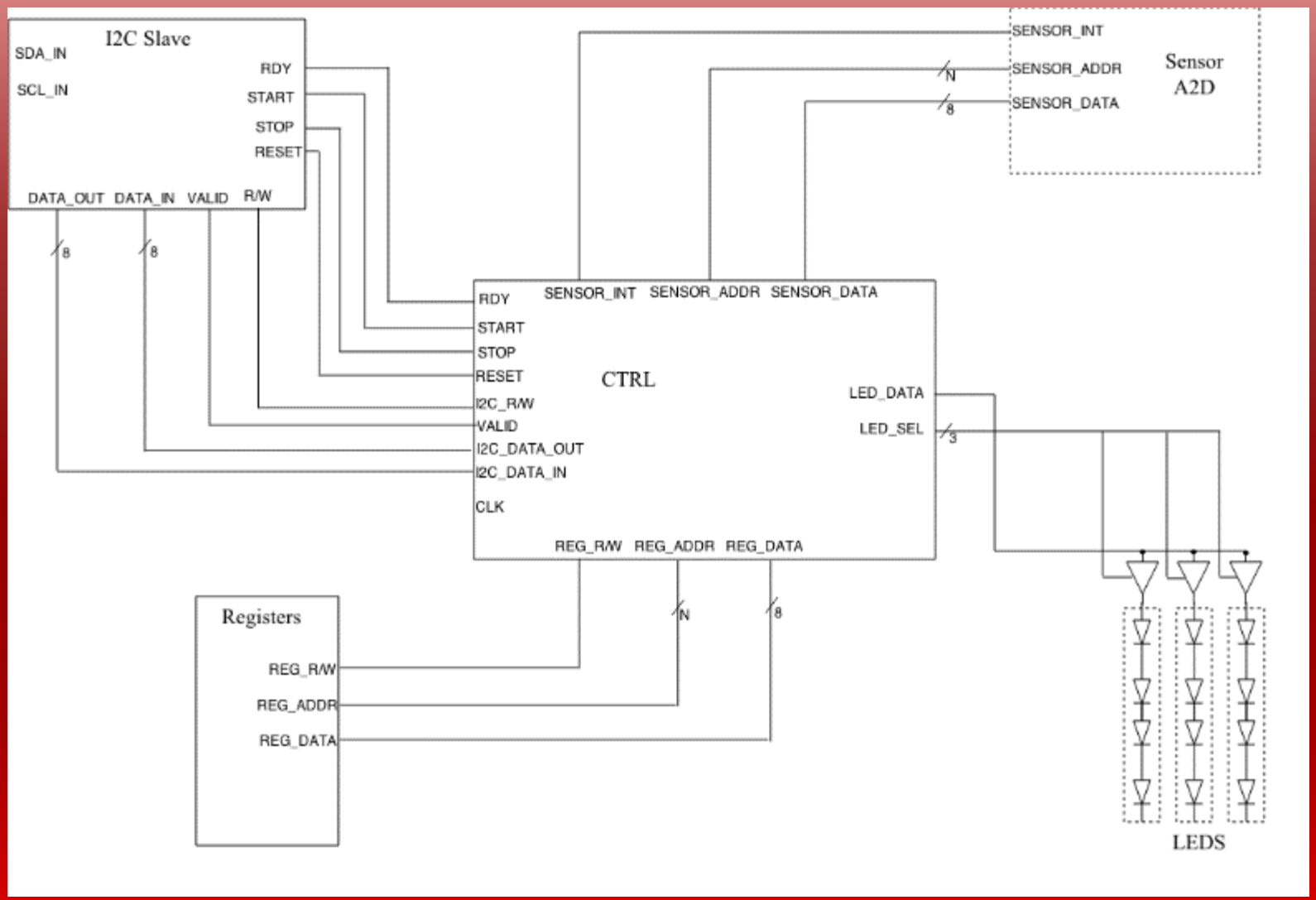

Parts – Tiles: Hardware Structure

- CPLD
  - Verilog HDL
    - I^2C Slave RD
    - LED/Sensor interface
    - Bus routing
    - Registers
- USB Connector
  - Power Supply
  - No serial data communication

Parts – Tiles: Software Structure

- Verilog (Tiles)
- C (Processor)
- Instruction Framework
  - Read
  - Write
  - Configure
  - Poll
- Event Handler
  - Interrupt and Poll driven

Power Distribution – Tiles

- +5.0V DC Power Supply through the connector from the PCB
- Two Voltage Regulators to provide isolation
  - +5.0V to +5.0V
    - Used to power the LM358 op-amp, CMOS inverter, and ADC
    - Also powers the CPLD through the USB connection that internally regulates the voltage to 1.8V
  - +5.0V to -5.0V
    - Done by switching the power and ground outputs
    - Used as the Vref for the force sensor current-to-voltage converter circuit.

Parts – Force Sensors

- Interlink Electronics FSR® 400 series
  - Part of the single zone Force Sensing Resistor® family
  - Actuation Force as low as 0.2N and sensitivity range to 20N
  - Robust: up to 10M actuations
  - LM358 Dual Op-amp to drive the sensor output

Parts – Force Sensors (II)

- Used to determine intensity and location of impact on the tile
- Each tile will have a 2x2 array of sensors to allow for four quadrants of location accuracy
- Sensor circuit will provide a 0 to +5V range of analog output that will be input into a CMOS inverter that will be set to switch at a predetermined threshold.
  - CMOS inverter used to:
    - Drive an interrupt line to the processor
    - Signal the ADC to start a conversion
- ADC will have an 8-bit parallel latched output to the CPLD

Parts – Force Sensors (III)

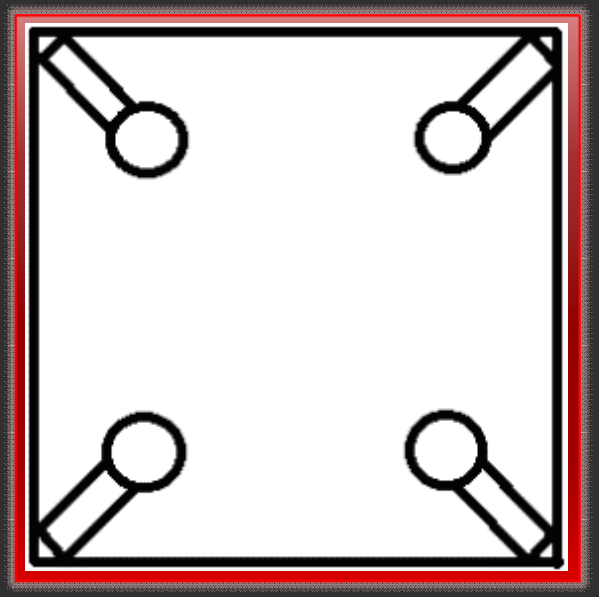

Force Sensor Layout

Op-Amp Circuit

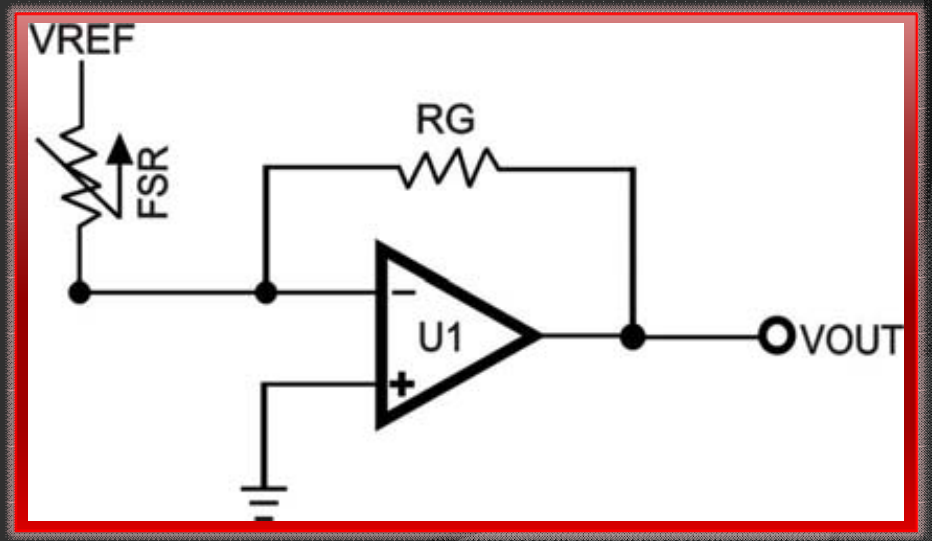

Parts – Android Application

- Android-based user interface that provides a redundancy check for the LCD Touchscreen
- Does not require any additional hardware other than an Android phone
- Will use either Bluetooth or WiFi to communicate with InfiniTable
  - Possibly used to stream music

Parts – Android Application (II)

- Using either the RN171XVW-I/R WiFi Module or the RN41XVC-I/RM Bluetooth Module
- Android API level 21 (Lollipop)
- Client server model with the WiFi/Bluetooth module as the server and the Andriod App as the client.
- Two states:
  - “Setup state” to establish a TCP/UDP connection, ideally with passcode authorization
    - Only allow for one client connection at a time
  - “Data transfer state” to allow for:
    - Mode selection
    - Music streaming

Parts – LCD Touchscreen

- Capacitive Touchscreen:
  - 800 x 480 Pixels
  - 3.3V Liquid Crystal Display
  - 24-bit Parallel RGB Interface
  - White LED Backlight
  - Capacitive Touch Panel with I^2C Interface

- Software description:
  - Capacitive touch screen is interrupt driven, and will send a signal to the processor when the user touches it
  - Will contain menus and options for game-play and general system control

Parts – LCD Touchscreen (II)

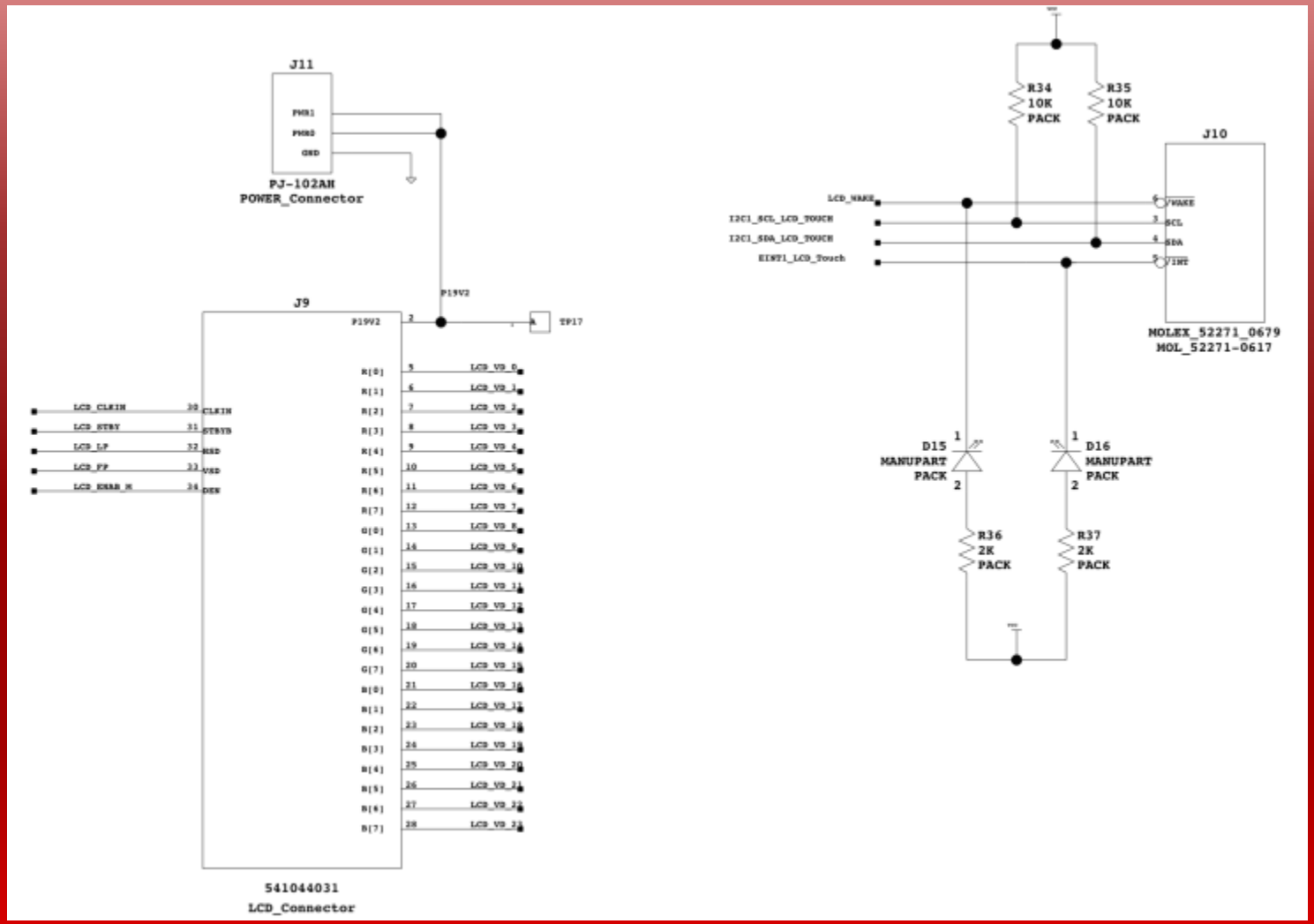

Parts – LED Strip

- 16.5mm wide, 4mm thick
- 32 LEDs per meter
  - Can be cut down to 2 LEDs (2.45” long per segment)
  - 5V at 120mA per segment
- Weatherproof casing
- Each LED is individually controllable
- Connector: 4-pin JST SM
  - Data, Clock, Power, and Ground

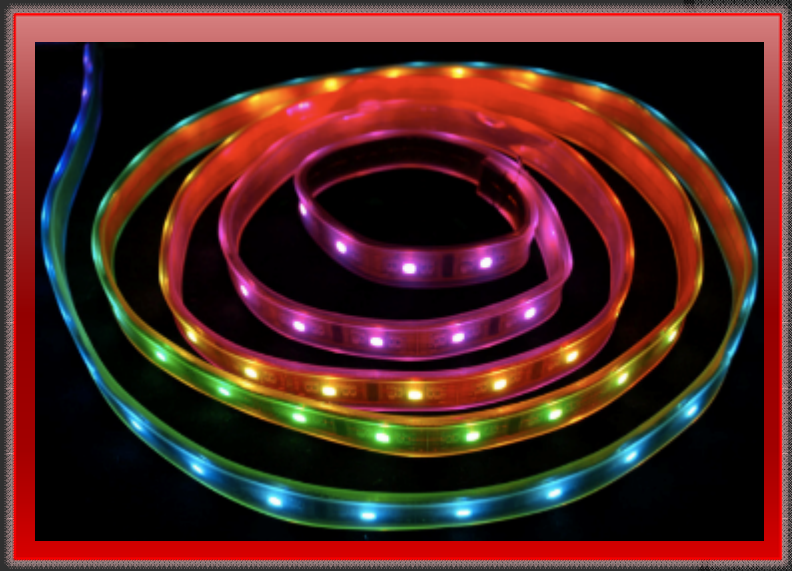

Parts – LED Strip (II)

- Possible layouts
  - Option 1:
    - Cross
  - Option 2:
    - 6 pointed star
  - Option 3:
    - Tic-Tac-Toe
  - Option 4:
    - Columns

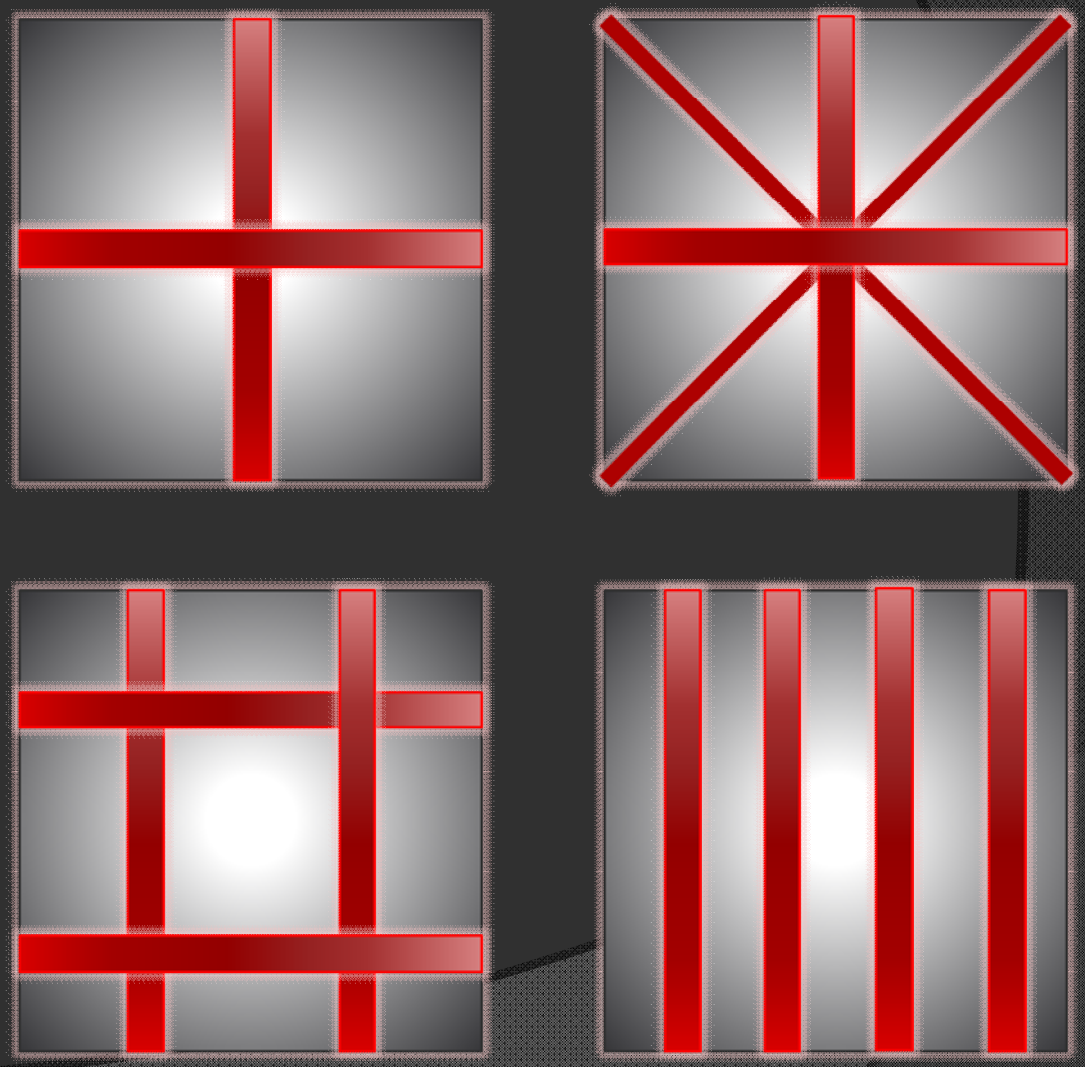

Parts – LED Strip (III)

- Power analysis
  - Layout Option 1:
    - 18 inches of LEDs – 6 segments
    - Maximum Power Consumption: 5V at 720mA per tile
  - Layout Option 2:
    - 44 inches of LEDs – 16 segments (1 meter)
    - Maximum Power Consumption: 5V at 1.92A per tile
  - Layout Option 3:
    - 36 inches of LEDs – 12 segments
    - Maximum Power Consumption: 5V at 1.44A per tile
  - Layout Option 4:
    - 36 inches of LEDs – 12 segments
    - Maximum Power Consumption: 5V at 1.44A per tile
- If some LEDs are kept off or dimmed, power consumption can be a third or less of the maximum

Parts – LED Strip (IV)

- LEDs will flash in different colors, frequencies, and patterns depending on the mode
  - Game-Play
    - Depending on the game being played, LEDs will change for that format
    - LEDs will also receive force and location data from the force sensors, and display this data visually on the tile
  - Music
    - LEDs will pulse and change color in response to music being played through the system
  - Idle
    - LEDs will change color and flash arbitrarily
- Software heavily based on provided sample code for the Arduino family of microcontrollers

Parts – WiFi Module

- RN171XVW-I/RM
  - Ultra-low power
    - 4 uA sleep, 35 mA Rx, 185 mA Tx at 12 dBm
    - Tx power configurable from -2 to 12 dBm
  - 2.4GHz IEEE 802.11 b/g transceiver
  - Configuration over UART interface using ASCII commands
  - Features Infrastructure, AdHoc, and AP modes
  - Secure WiFi authentication via WEP, WPA, and WPA2
  - Built-in networking applications

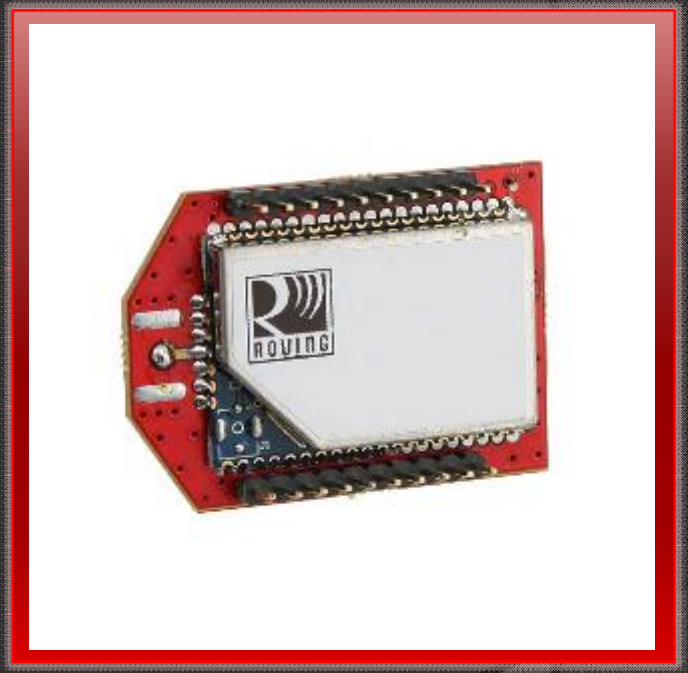

Parts – WiFi Module (II)

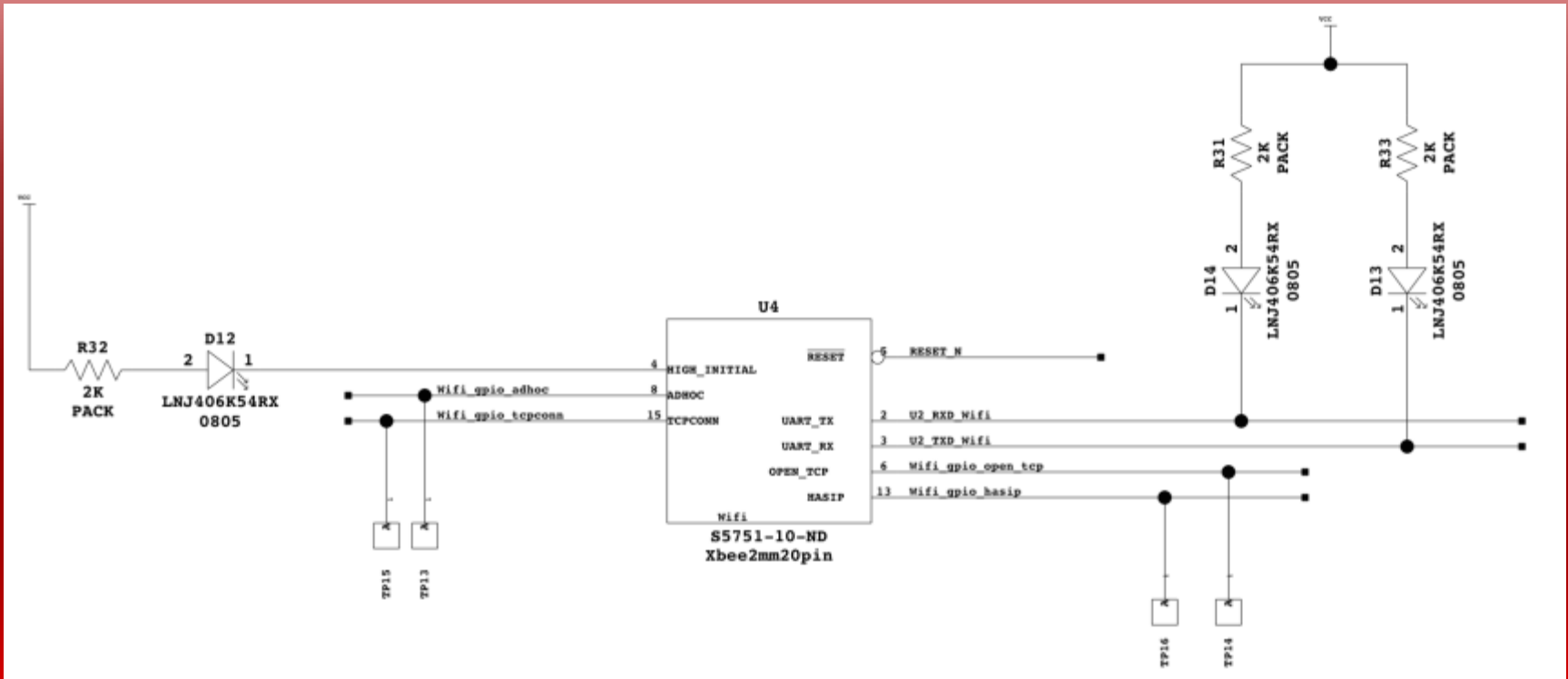

Parts – Bluetooth Module

- Microchip Technology RN41-XVC
  - Wireless communication with InfiniTable via Bluetooth on an Android phone
  - Variety of game settings can be selected through Android application
  - Backwards-compatible with Bluetooth version 2.0,1.2, and 1.1
  - Secure communication, 128-bit encryption
  - UART Data Connection
  - Requires 3.3V power supply

Parts – Bluetooth Module (II)

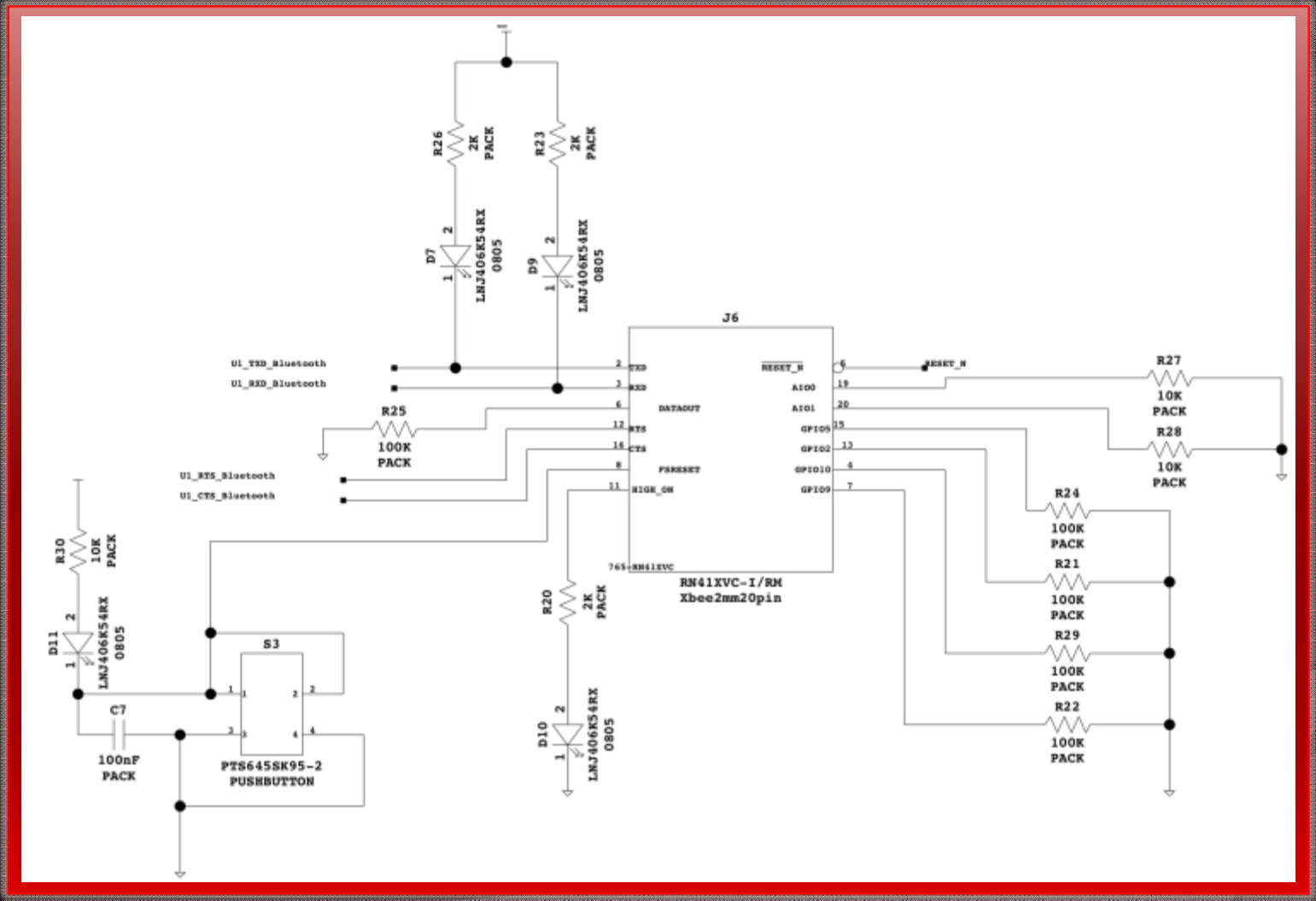

Parts – MP3 Decoder

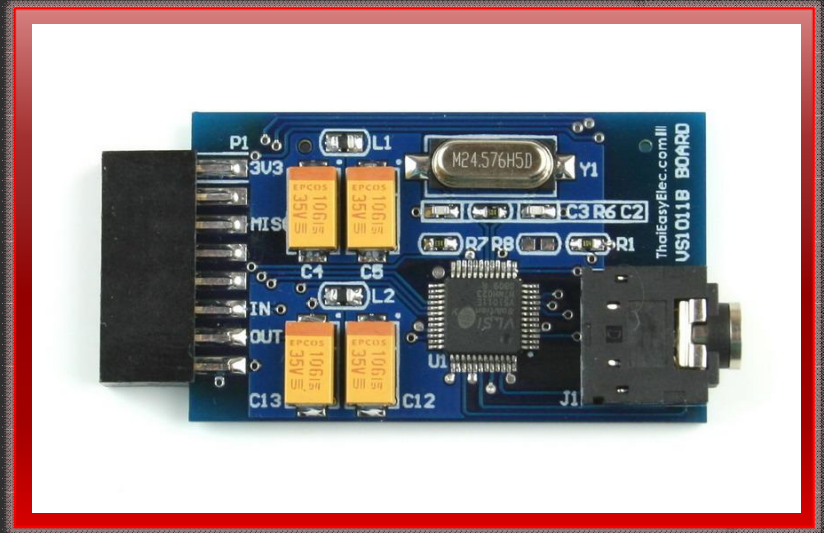

VS1011 Module

- Decodes MPEG 1.0 & 2.0 audio layer III; layers I & II optional
- 320 kbit/s MP3 with 12.0 MHz external clock
- High-quality stereo DAC for optimal sound quality.
- Data Connection: SPI
- Single-Supply Operation: 2.5 to 3.6 V
- 5.5 KiB On-chip RAM for user code or data
- 3.5 mm jack to connect to connect external speakers

Parts – MP3 Decoder (II)

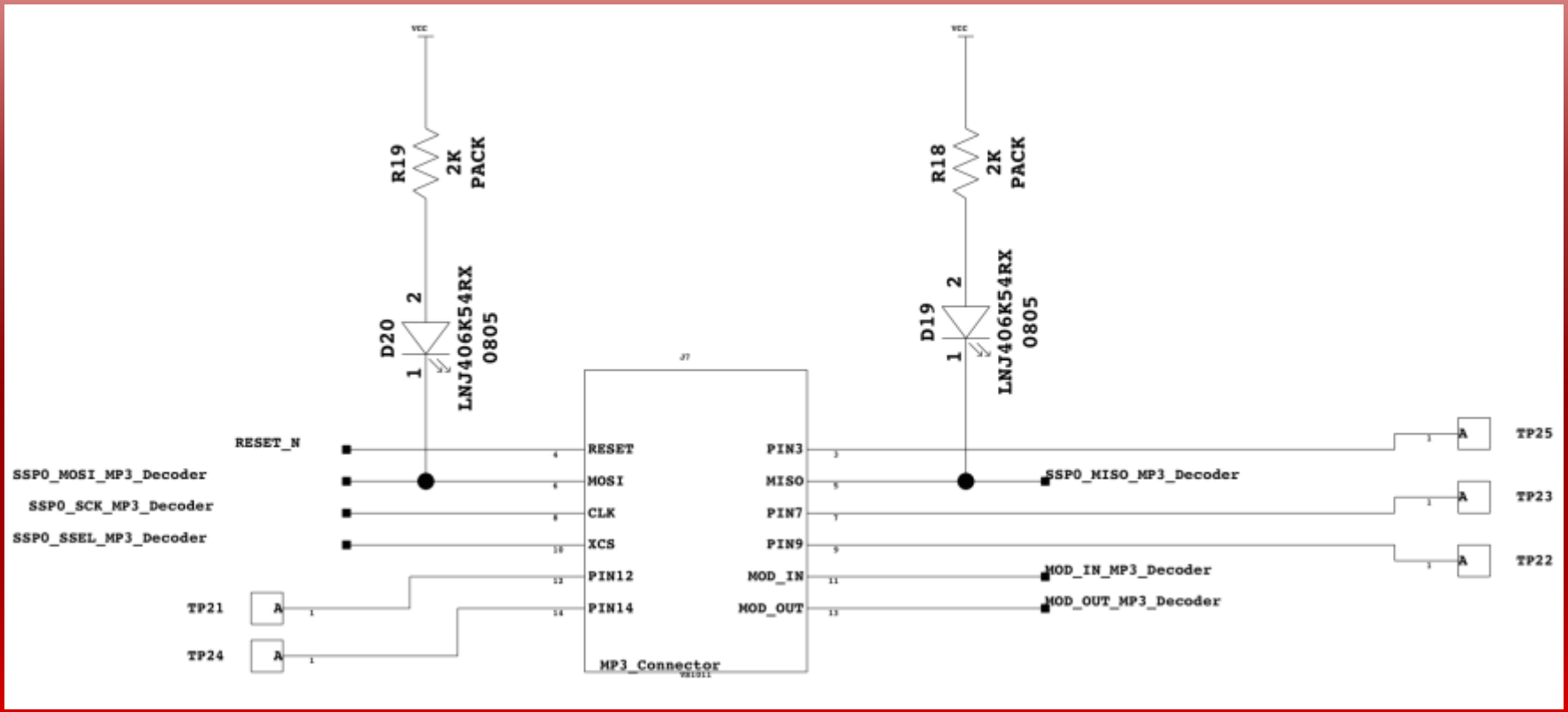

Parts – SD Card Reader

- Kyocera 5738 Series
  - Surface mounted, works with generic SD Card
  - Stores game data and audio data for points scored and fouls
  - Use of both SPI bus and 4-bit SD bus

Parts – SD Card Reader (II)

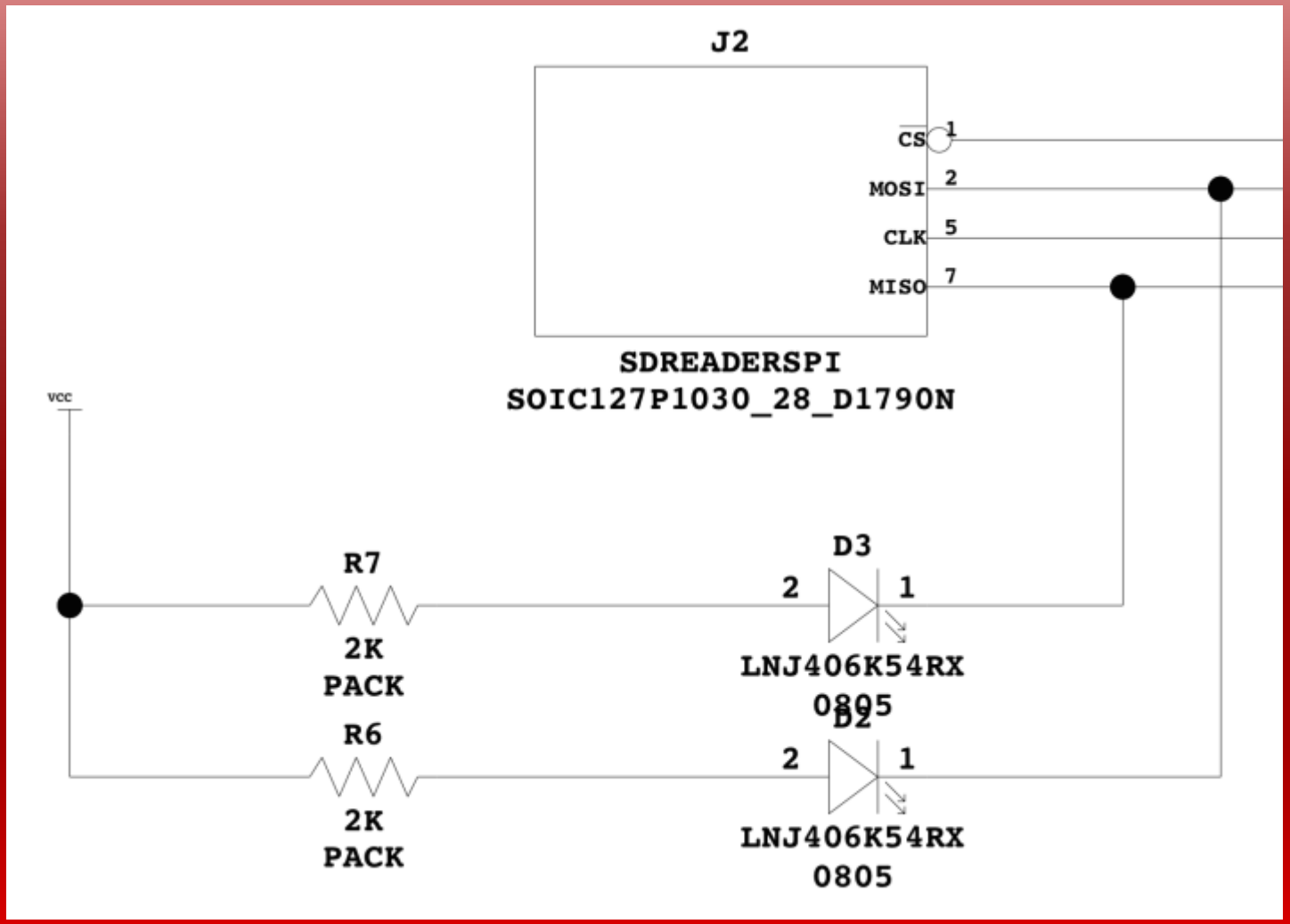

Printed Circuit Board

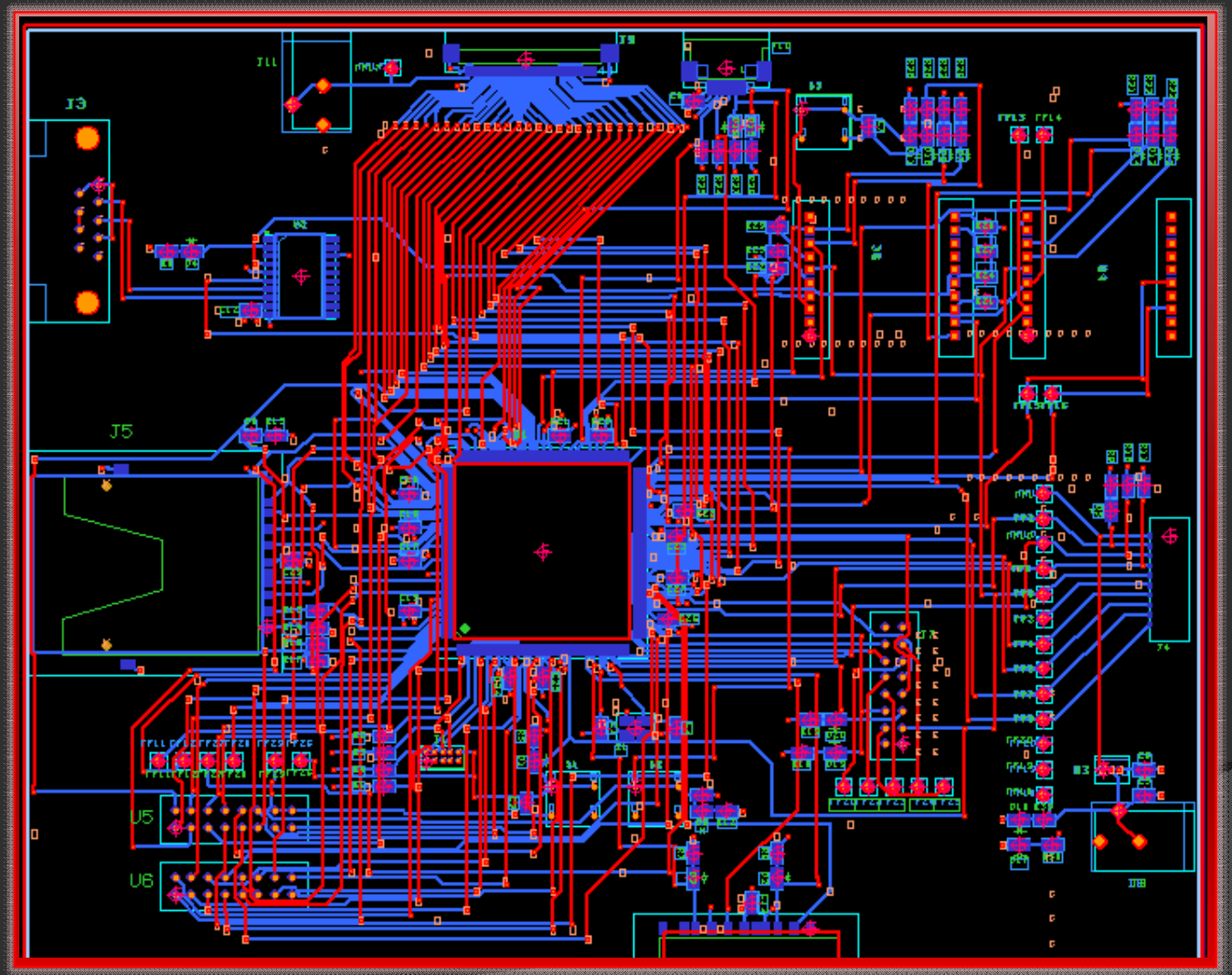

Power Distribution – PCB

- Two barrel jacks:
  - 5V input for most of the PCB
  - 19.2V Input for the LCD display
- The 5V input will be regulated down to 3.3V to supply every IC on the PCB
- The MP3, Bluetooth and WiFi module all handle analog power independently given a 3.3V digital input.

Critical Elements

- Accurate location and force measurements from the force sensors
- Capability for any tile configuration
  - Tile addressing
- Working user interface
  - LCD touchscreen or Android Application

Schematic and Bill of Materials

- The full schematic and bill of materials can be found in the attached PDFs

Questions? Comments?

Thank you!