Swell Alert

Surf Lead:
Eric Goodman

Surf Dudes:
Ryan Summers
Adam Sundberg
Outhone Bounkhoun

Design Ideas and Goals

Priority:

Creation of a wifi-enabled, touch screen alarm clock that gathers surf data to determine when to awaken a surfer

Side goal:

Stream music from a server (possibly Pandora)

Utilizing GPS location to get appropriate surf data

Utilizing GPS to set atomic time

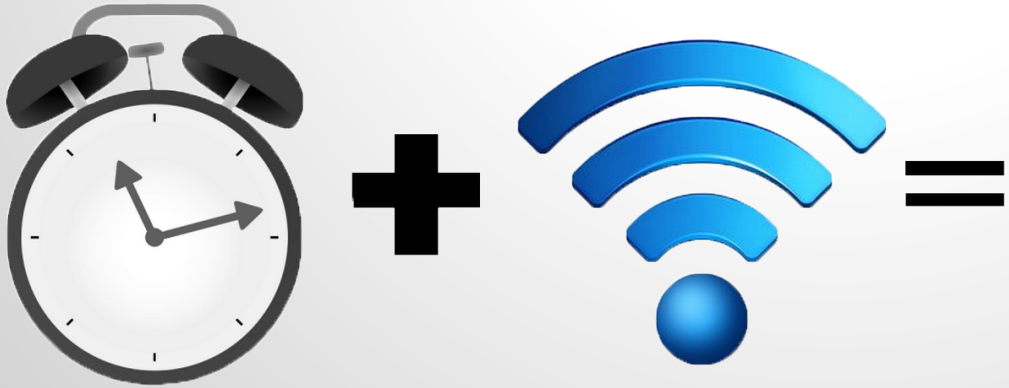

Basis of Project Swell Alert

National Data Bouy Center http://www.ndbc.noaa.gov/ has publicly availiable bouy data via a ftp server. This information is updated every half hour.

Websites such as surfline.com give week-long forecasts. Setting your alarm clock early because the forecast appears good may cause needless loss of sleep when there there are no waves.

Team Member Expertise

Eric Goodman - Team Lead, Wifi and Buoy Data

Ryan Summers - Processor, SDRAM, GPS

Adam Sundberg - All things music (MP3, DAC, Pandora)

Outhone Bounkhoun - Power, Touchscreen, Caterer

Adam and Outhone - Powerpoint pictures

Top Level Block Diagram

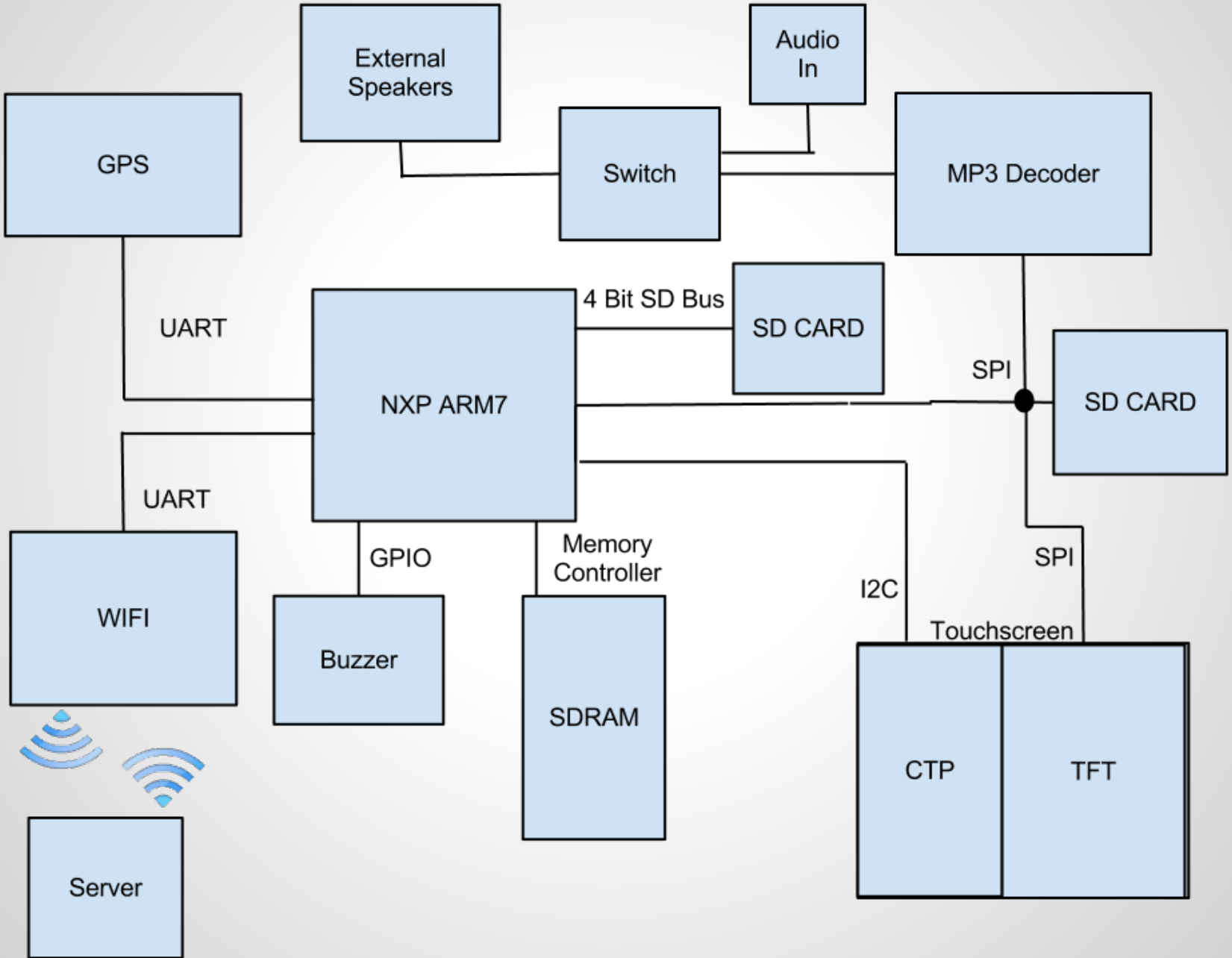

Bill of Materials

Name	REFDES	DESCRIPTION	Purpose/Part	MANUF PART #
Wifi Socket	J1-J2	10 Pin Symmetric 2mm pitch Female to Male Connector	Wifi	PRT-08272
RS232 Edge Connector	J3	CONN D-SUB PLUG R/A 9POS GOLD/FL	RS232 Connector	1734351-1
RS232 to UART	U2	IC TXRX RS232 DUAL250KBPS 20SOIC	RS232 to UART	MAX3233ECWP+G36
Processor	U1	NXP LPC2478FBD208 Processor	Processor	LPC2478FBD208
LCD Connector	J4	CONN FFC/FPC 54POS ZIF .5MM SMD	LCD Connector	51296-5494
CPT Connector	J5	CONN FFC 6POS 1MM R/A ZIF SMD	CPT Connector	52271-0679
SDRAM	U2	IC SDRAM 128MBIT 133MHZ 54TSOP	SDRAM	MT48LC8M16A2-7E
Audio Jack	U3-U4	CONN JACK STEREO R/A 3PIN 3.5MM	Audio Jack	SJ1-3523NG
SD Socket	J6-J7	SD/MMC Socket for Secure Digital Disk or Multi Media Cards	SD Socket	
MP3 Decoder	U5	VS1011	MP3	VS1011e
3.3 Voltage Regulator	U6-U7	IC REG LDO 3.3V 1A TO-263	3.3V Regulator	LM3940IMP-3.3/NOPB
3 Voltage Regulator	U8-U9	IC REG LDO 3V .25A SOT23-3	3V Regulator	MCP1700T-3002E/TT
Molex 4-pins	J8-J9	CONN HEADER 4POS .100 VERT TIN	GPS/MP3 MUX Pins	22232041
Berg Pins-1	TP1-TP50	BERGSTIK II .100" SR STRAIGHT	Test Pins	68000-401HLF

Bill of Materials continued...

LED-Green	D?-D?	LED GREEN CLEAR 0805 SMD	Power	LTST-C170KGKT
LED-Red	D?-D?	LED RED CLEAR 0805 SMD	?	LTST-C170CKT
LED-Blue	D?-D?	LED BLUE CLEAR 0805 SMD	Data & Buses	LTST-C170TBKT
.47uF Capacitor	C1-C2	CAP CER 0.47UF 50V 10% X7R 0805	3.3V Regulator	C0805C474K5RACTU
33 uF Capacitor	C3-C4	CAP CER 33UF 10V 20% X5R 0805	3.3V Regulator	C2012X5R1A336M
1uF Capacitor	C5-C8	CAP CER 1UF 50V 10% X7R 0805	3V Regulator	C0805C105K5RACTU
100 uF Capacitor	C11-C12	CAP CER 100UF 10V 20% X5R 1206	Left/Right MP3	C3216X5R1A107M
33pF/50V	C13-C14	CAP CER 33PF 50V 5% NP0 0805	MP3 Crystal	C0805C330J5GACTU
18pF Capacitor	C15-C16	CAP CER 18PF 50V 5% NP0 0805	Processor Crystal/RTC	C0805C180J5GACTU
Bypass Capacitors	C17-C96	CAP CER 0.1UF 50V 10% X7R 0805	Power	C0805C104K5RACTU
Resistors				
100k Ohm Resistor	R1-R4	RES 100K OHM 1/4W 5% 1206 SMD	MP3	RC1206JR-07100KL
100 Ohm Resistor	R5-R6	RES 100 OHM 1/4W 5% 1206 SMD	MP3	RC1206JR-07100RL
1M Ohm Resistor	R7	RES 1.0M OHM 1/4W 5% 1206 SMD	MP3	RC1206JR-071ML
Pull-up Resistors?	R8-R27	RES 1.0K OHM 1/4W 5% 1206 SMD	MISC	RC1206JR-071KL

Bill of Materials again...
We had a lot of Parts :)

MP3 Crystal	Y1	CRYSTAL 12.288MHZ 18PF SMD	MP3	ABLS-12.288MHZ-B2-T
Processor Crystal	Y2	CRYSTAL 20.000 MHZ 10PF SMD	Processor Crystal	7B-20.000MEEQ-T
Real Time Clock Crystal	Y3	CRYSTAL 32.0000KHZ 11PF CYL	Real Time Clock	C-2 32.0000K-P:PBFREE
Push Button	SW1	SWITCH PUSH SPDT 0.4VA 28V	Master Reset Switch	UB15SKG03N-C
Mux-Switch	----------	switch for MP3/Audio in	MP3/Audio in	A201P3ZQ04
1-Switch	SW3-SW12	SWITCH SLIDE	Switches	CL-SB-12A-01T or JS202011SCQN

Power

- Initial 5V Power supply
  - Voltage Regulators
    - 3.3V (1 Amp) Regulator
    - 2x 3V (250 mA) Regulators
      - Capacitive Touch Panel Power Supply
      - Analog Power Supply for MP3 Decoder
  - 400mA necessary for all modules
- 19V Power Supply for LCD Backlight

Processor

NXP LPC2478

- 3.3V Operation
- 512kb on chip flash / 98k on chip SRAM
- LCD Controller (For our TFT screen)
- Support for external static memory Via EMC
    - We will use an external 3.3 128Mb SDRAM module
- 4 UART busses
    - For Wifi, Programing the Processor, GPS
- 3 I2C bus interfaces / 1 I2S bus
    - For Capacitive Touch Panel
- SPI interface
    -For MP3 Decoder, Touchscreen LCD, SD card

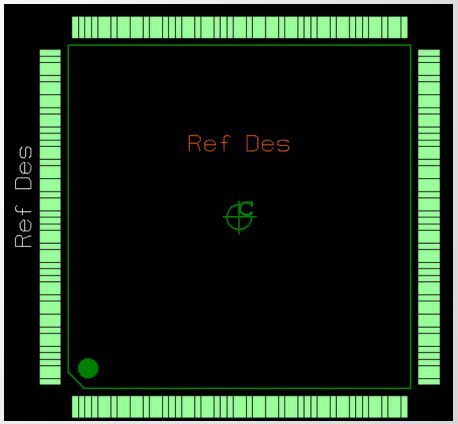

Datasheet

http://www.nxp.com/documents/data_sheet/LPC2478.pdf

Schematic

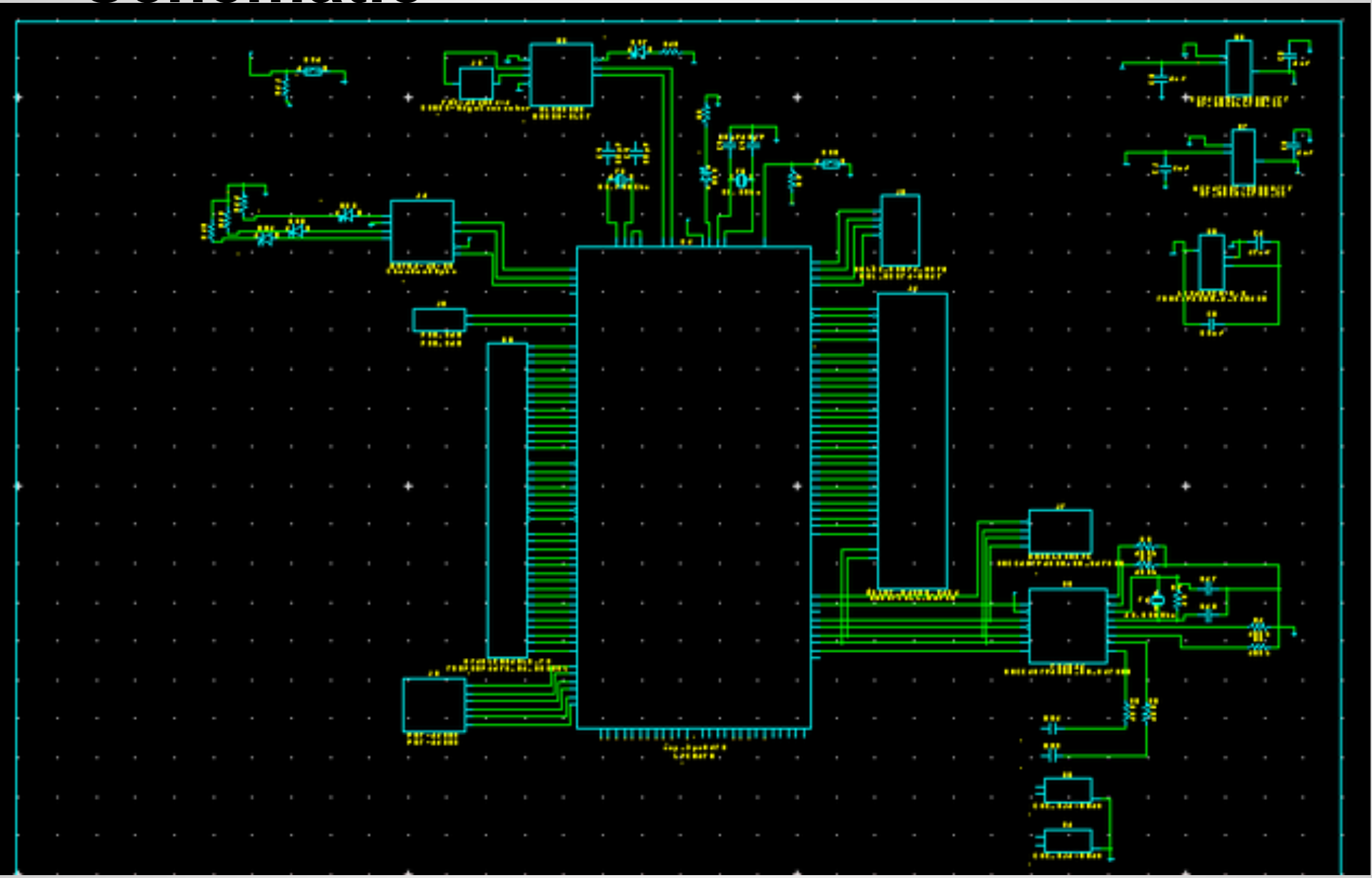

SDRAM

-Used as a WIFI buffer

-FTP files

-Streamed songs

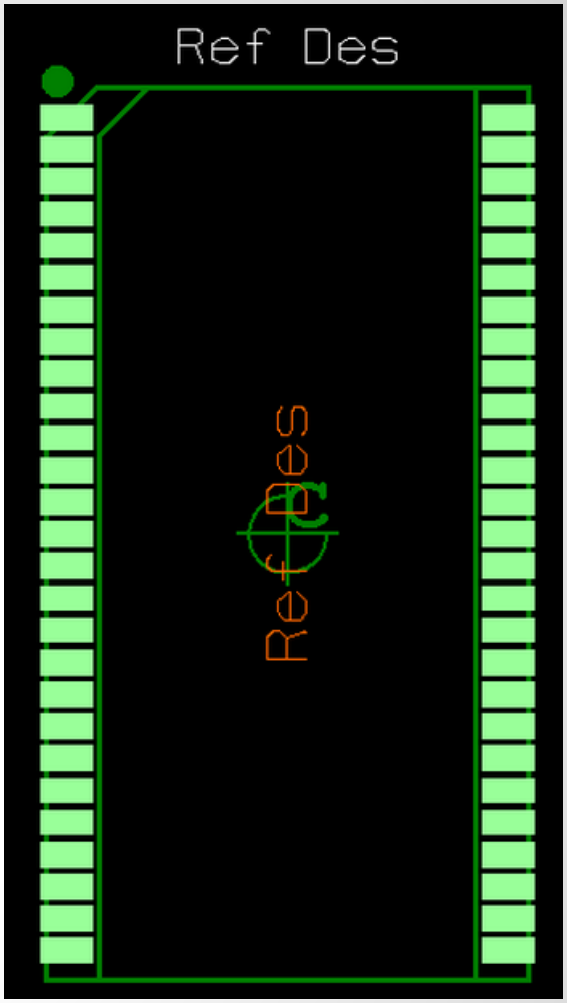

SDRAM Schematic

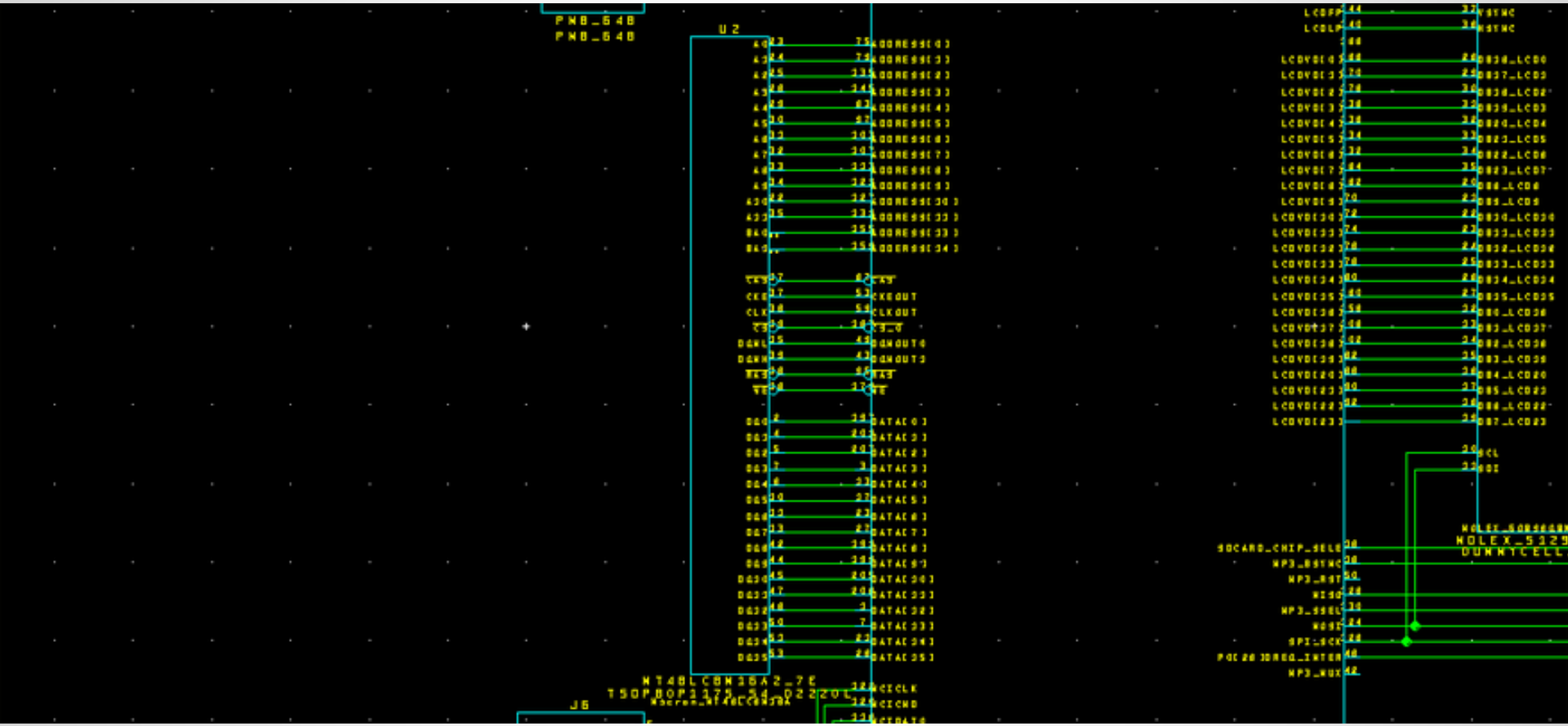

Wifi

RN171XVW-I/RM

- -3.3V Operation
  - -Ultra-low power - 180mA Tx
- -Supports AD-HOC and Infrastructure
- -802.11 b/g
- -Contains complete internet protocols
  - -WEP, WPA, WPA2
  - -DHCP, DNS, ARP, ICMP
  - -TCP/IP
  - -FTP client, HTTP client
- -TTL UART connections
- -Communicates via ASCII

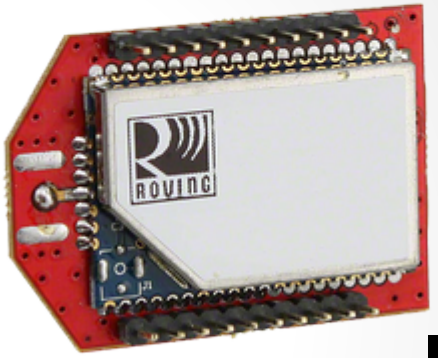

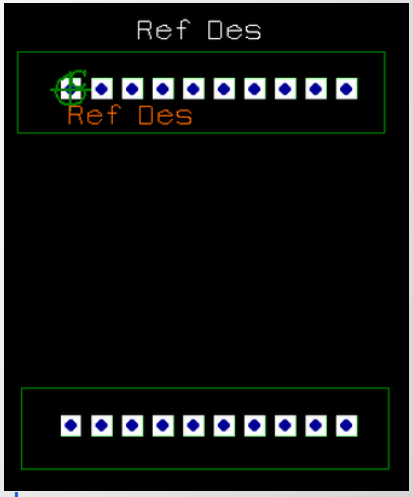

http://www.rovingnetworks.com/products/RN_XV

http://www.digikey.com/scripts/DkSearch/dksus.dll?WT.z_header=search_go&lang=en&keywords=rn-xv&x=0&y=0&cur=USD

GPS

SSF 2929P SiRF III GPS Receiver

-UART interface

-3.3v

Uses

- Used as a method of keeping atomic time.
    - Alternative to WWVB (Atomic Clock broadcast)

-Auto locate user and poll local beach data.

-Find number of beaches within user defined distance Via Server poll

-Automatically knows what current time is, no matter where/when it is plugged in.

Real Time Clock

-Using the NXP onboard RTC.

-RTC counts seconds, minutes, hours, date of the month, month, day of the week, and year with leap year

GPS & WIFI Interrupts

-Both the GPS and the WIFI will use polling

-Easily can be done with a time stamp

-New Buoy data every 30 Minutes

-Check timestamp on the GPS against RTC every hour

NHD-3.5-320240MF-ATXL#-CTP

- -3.5" Diagonal Screen
- -Capacitive Touch Panel
- -320x240 Resolution
- -I2C and SPI Interface
- -24 bit RGB Interface for the LCD

Audio

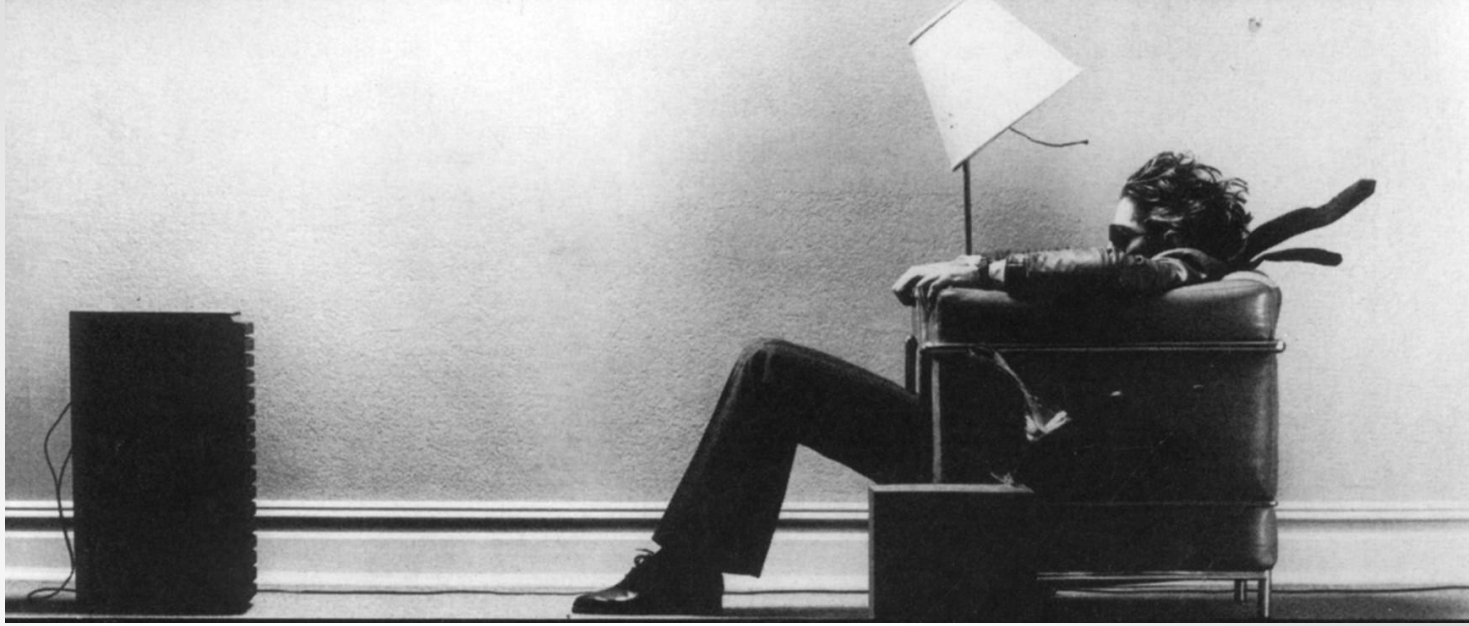

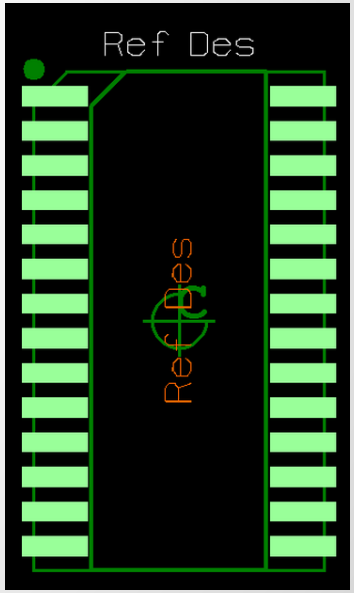

VLSI Solutions VS10011E

- MP3 decoder/DAC
- SPI interface
- Produces stereo sound
- Internal buffer
- DREQ pin tied to processor interrupt

Audio Diagram

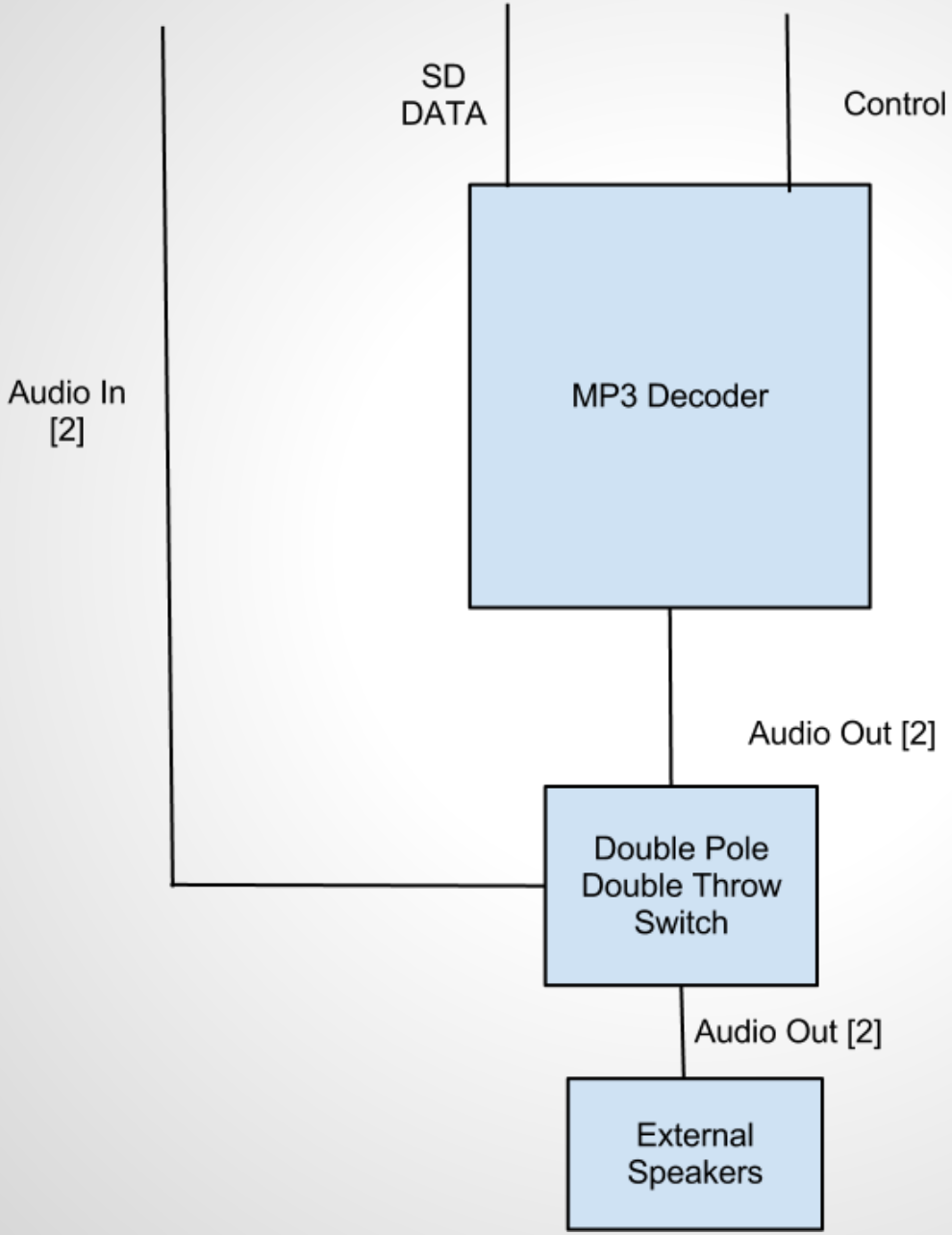

Audio Storage

-SD Card for easy storage and editing of music.

-SD socket over both SPI and 4 Bit SD Bus.

-Auxiliary in for easy connection to external MP3 player.

-Headphone out for easy connection to external powered speakers

-SDRAM as a buffer for streamed music.

SD Socket

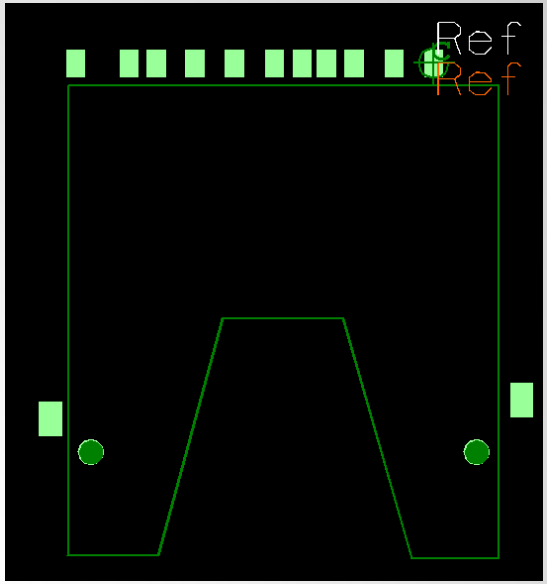

SPI Bus

Pin	Name	I/O	Logic	Description
1	nCS	I	PP	Card Select (Neg True)
2	DI	I	PP	Data In [MOSI]
3	VSS	S	S	Ground
4	VDD	S	S	Power
5	CLK	I	PP	Clock [SCLK]
6	VSS	S	S	Ground
7	DO	O	PP	Data Out [MISO]
8	NC nIRQ	. O	. OD	NC (Memory Cards) Interrupt (SDIO Cards)
9	NC	.	.	NC

Four-Bit SD Bus

Pin	Name	I/O	Logic	Description
1	DAT3	I/O	PP	Data 3
2	CMD	I/O	PP,OD	Command, Response
3	VSS	S	S	Ground
4	VDD	S	S	Power
5	CLK	I	PP	Clock
6	VSS	S	S	Ground
7	DAT0	I/O	PP	Data 0
8	DAT1 nIRQ	I/O O	PP OD	Data 1. SDIO Cards share with Interrupt Period
9	DAT2	I/O	PP	Data 2

MP3 Schematic

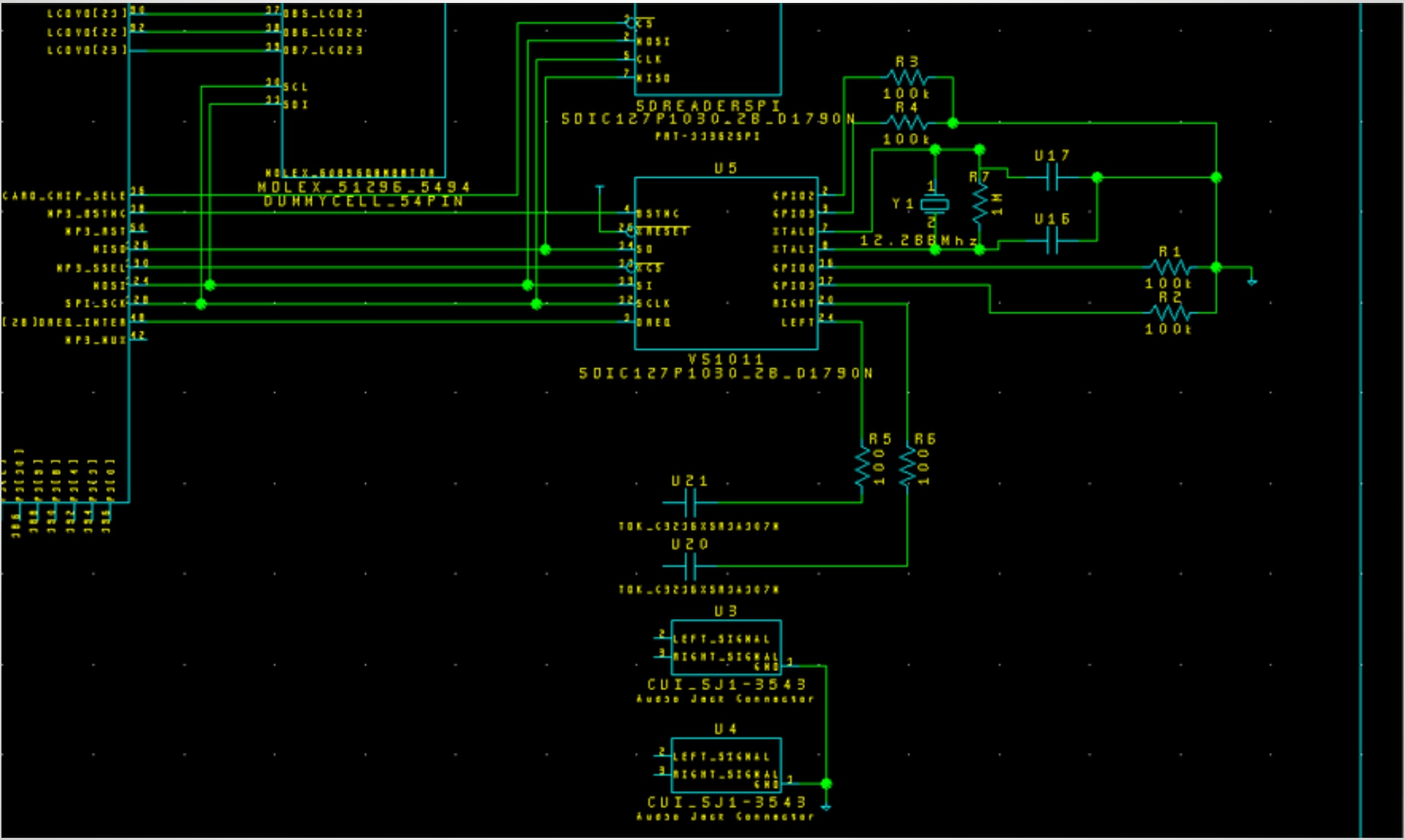

MP3 & LCD Interrupts

-Both the CTP and the MP3 converter will make use of interrupts on the processor.

-MP3 will send a signal to the processor using its DREQ pin when it is able to receive Data.

-CTP will send signal to the processor when it has data to transmit.

Buzzer

-Added a buzzer for those days that its extremely hard to get out of bed

-If no music is hooked up then defaults to buzzer

-Demonstration of its annoyance...

Server

Required Protocols

- -Java/JavaScript
  - -Used to handle web queries to server
    - -Where Am I
    - -Get Local Beaches
    - -Get Conditions of Specific Beach
    - -Stream Pandora Data
- -FTP
  - -Used to download files
    - -Handle MP3 files on a remote device
- -SQL
  - -Potentially make parsing databases of data easier

Software

-Need to open TCP connection with WIFI module.

-Already wrote code to do this in CSMPC 176A.

-After connection is established can transfer data to the WIFI module (i.e. surf data, weather) and from the module to the server (i.e. GPS location to discover nearest surf).

Failsafes

-Added 24 GPIO pins with headers in case touchscreen or other module problems arise.

-Multiple SD cards.

-Multiple ways to get Music (MP3/Audio in/FTP).

-Multiple timing methods.

-Test headers, lots of test headers

-Write own protocol using TCP to transfer data or use built-in FTP.

Critical Elements

Wifi

- Needed For interaction with online buoy data

Server

- Extracting online data into usable format and send back to clock
- (Handling of Internet Music streaming)

Audio

- Without audio our alarm clock isn't an alarm clock.
- Redundant input and output of audio includes AUX IN, AUX OUT, SDCard, FTP Music, Internet Streaming

Accurate Timekeeping

- Implemented with GPS
- Can use wifi data to periodically poll data from our server

LCD Display

- Clock is useless with no display of time

Questions?

Comments?