AURCA

Advanced Universal Remote Control Aircraft

UCSB ECE 189A/B Fall 2011 & Spring 2012

Alexander Adams
Michael McKeown
Ethan Preble
Sebastian Siatkowski

AURCA

Concept Diagram

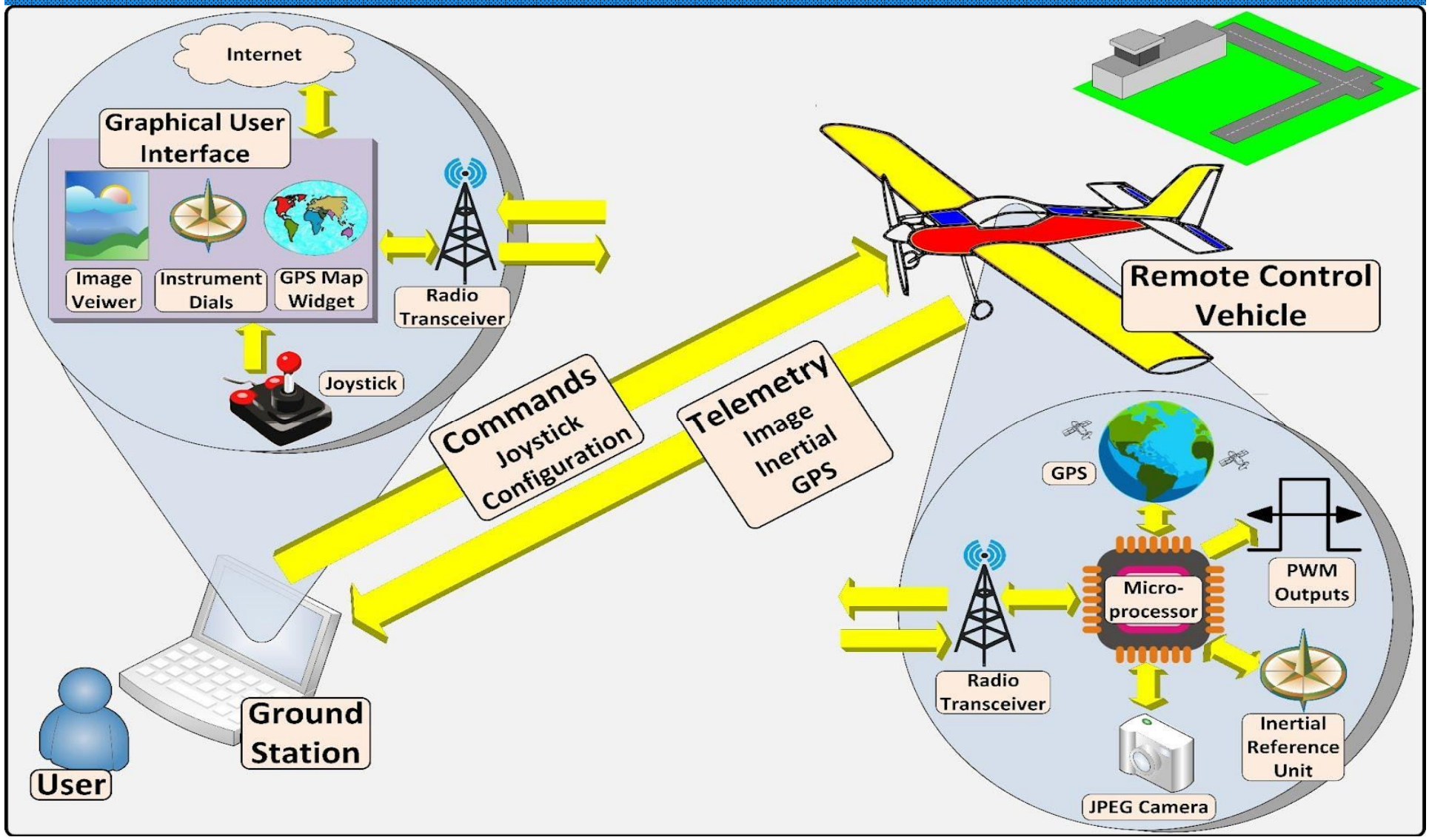

AURCA

Ground Station System Level Block Diagram

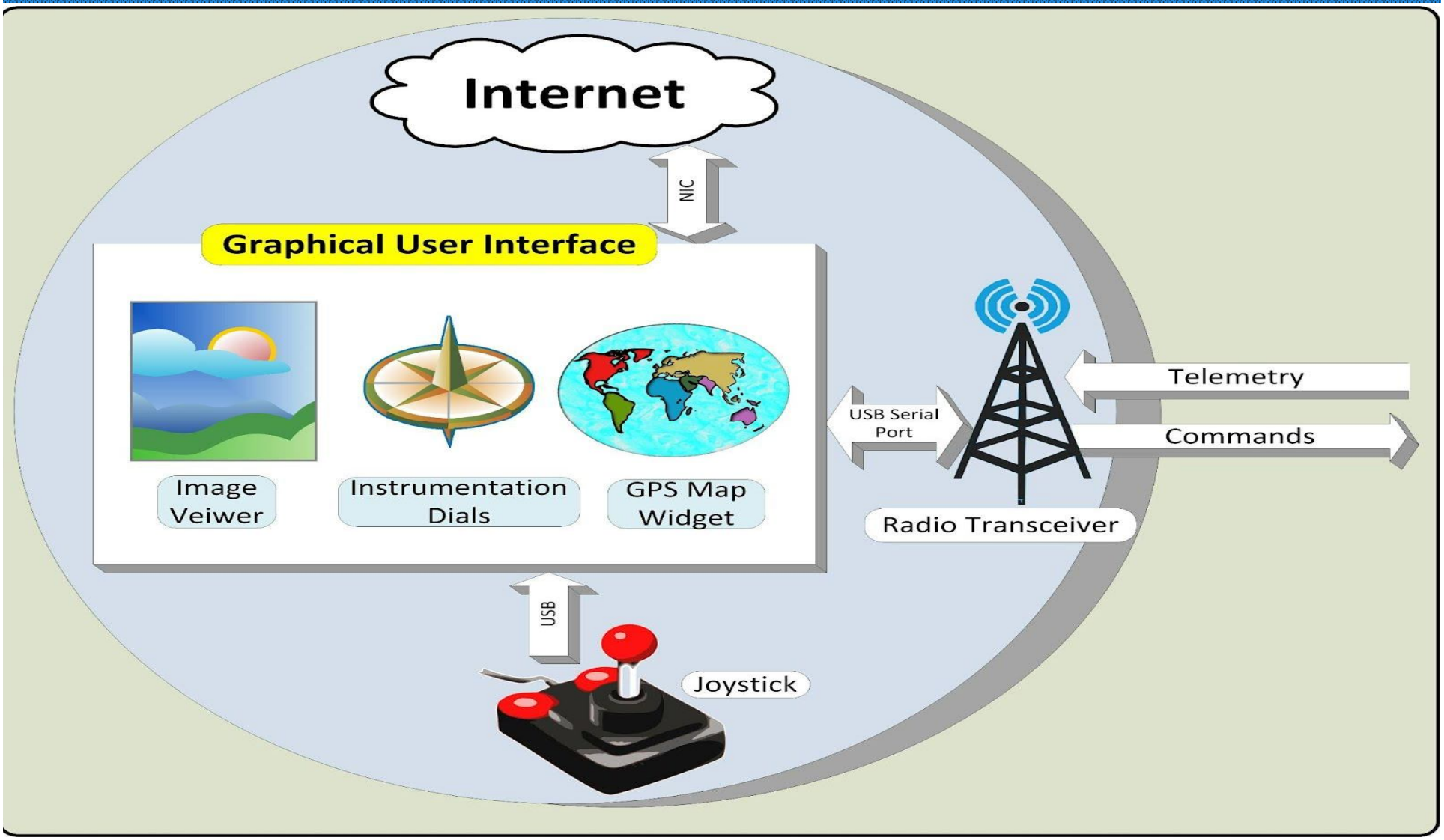

AURCA

On-Board System Level Block Diagram

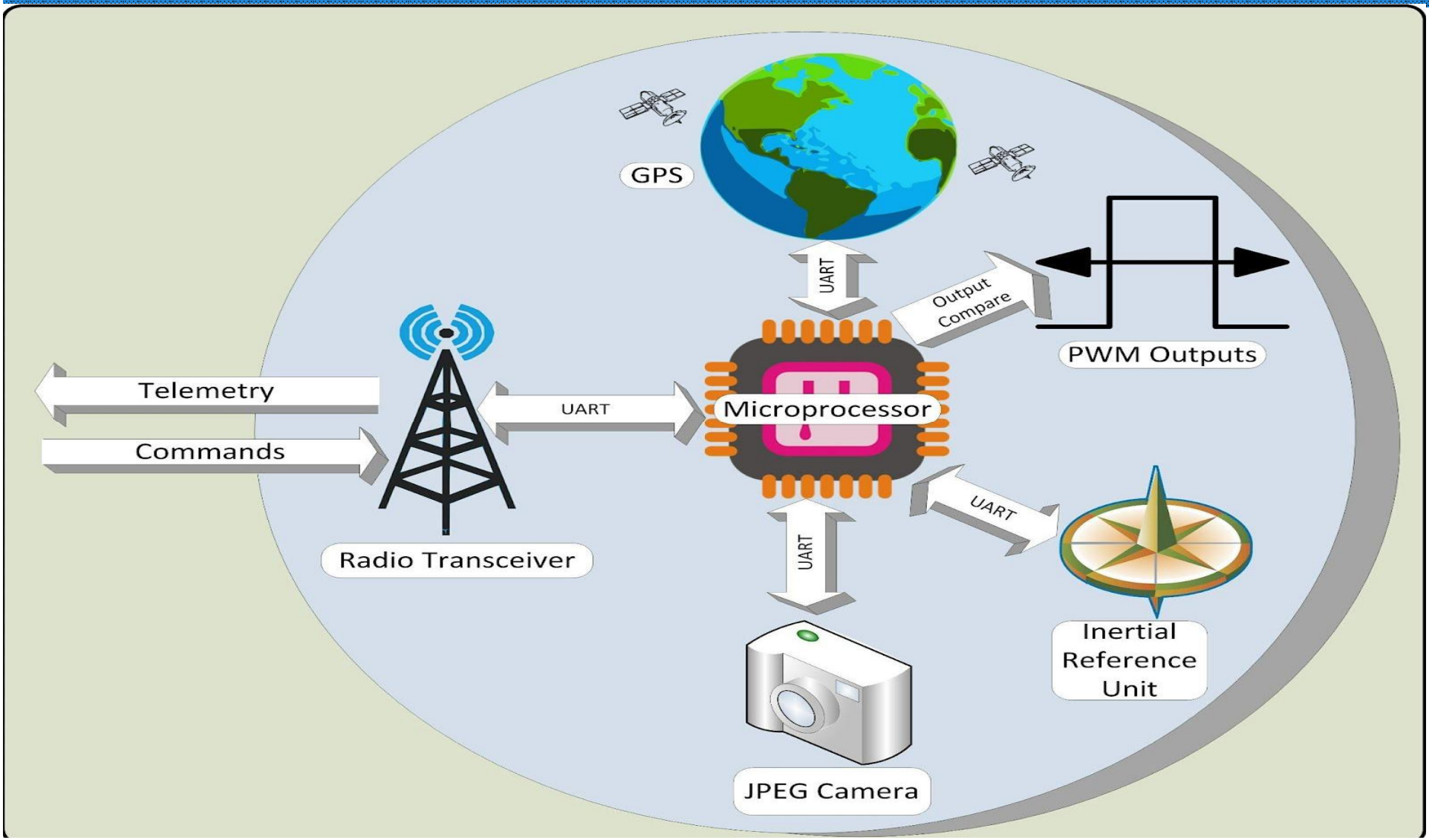

AURCA

Group Organization

- **Alexander Adams - Aircraft Control & Power Manager**
  - Power Supplies
  - PWM Controllers
  - Inertial Reference Unit
- **Sebastian Siatkowski - Microprocessor Manager**
  - Microprocessor Hardware
  - Microprocessor Software Initialization and Configuration
  - Camera Module
- **Michael McKeown - Software Architect**
  - On-Board Code Structure
  - Ground Station GUI Structure
  - GPS Module
- **Ethan Preble - Wireless Communication Manager**
  - Wireless Transceiver Configuration
  - Wireless Protocol Definition
  - Joystick Interface

AURCA

Vehicle Interface

- Power from BEC
- PWMs control ESC and Servos
- Out of radio range behavior

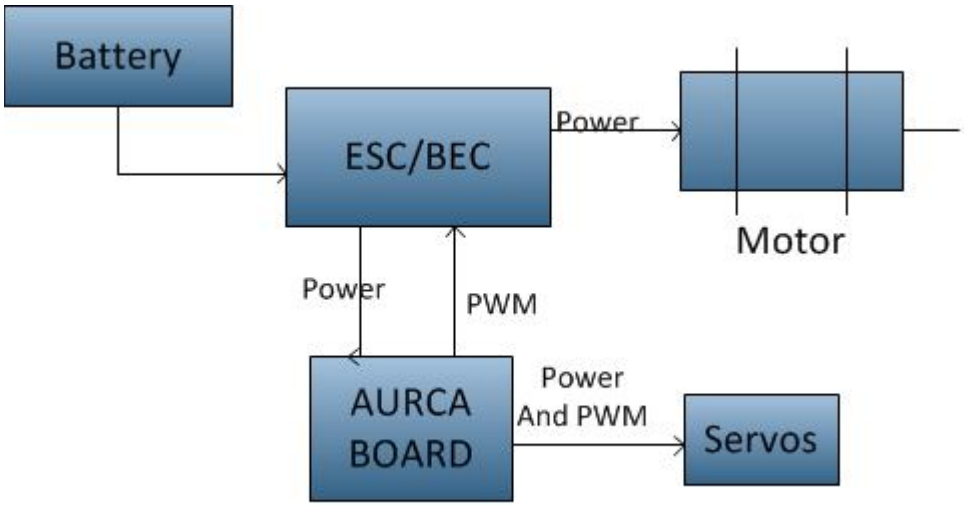

AURCA

Orientation Sensor

- Sensors
  - 3 axis accelerometer
  - 3 axis gyro
  - 3 axis magnetometer
- Kalman filtering
- OEM module
- Heading has singularity at board pitch of +/- 90 degrees

Microprocessor Hardware

PIC24FJ64GA106

- 32 MHz clock
  - 8 MHz External Crystal w/ 4x PLL
- 4 UARTs
- 16 kB Memory
- Timer interrupts
- 16-bit Architecture

AURCA

Camera Module

LinkSprite LS-Y201

- On-Chip JPEG Compression
- Configuration
  - Compression Ratio
  - Image Size
    - 640x480,320x240,160x120
- Implemented Features
  - Capture Mode
    - Continuous (0.1 - 1 FPS)
    - On Request
  - Image Save to Disk Option
- Large On-Board State Machine

AURCA

Global Position System (GPS) Module

66 Channel LS20031 GPS Receiver

- Original GPS module was faulty

- Configured to output latitude, longitude, altitude,ground speed, and fix information at 2.5 Hz

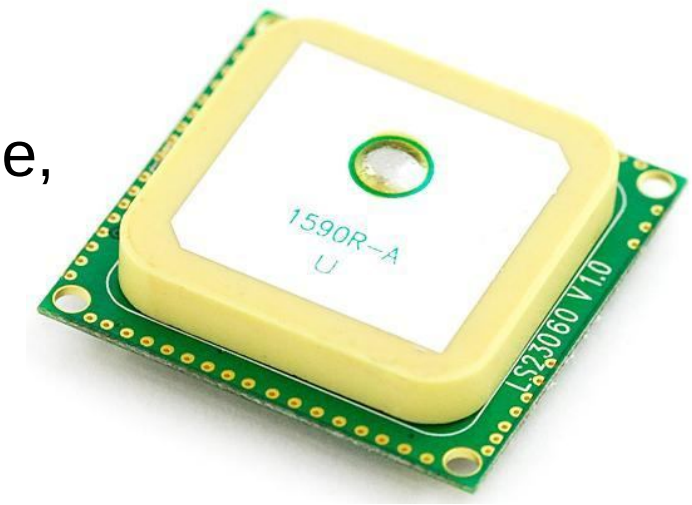

- Position Accuracy: 2.5m-3m (at best)

Altitude < 18,000 m, Velocity < 500 m/s

- Transmits data to ground station at 1Hz

- Ground station displays data on GUI

Ground Station Software Components and Structure

- Qt (Open Source GUI Framework) with Microsoft Visual Studio 2010 C++
  - Main Window
  - Widgets/Objects
    - Open Source Libraries
  - Signals and Slots

AURCA

Ground Station Software Components and Structure

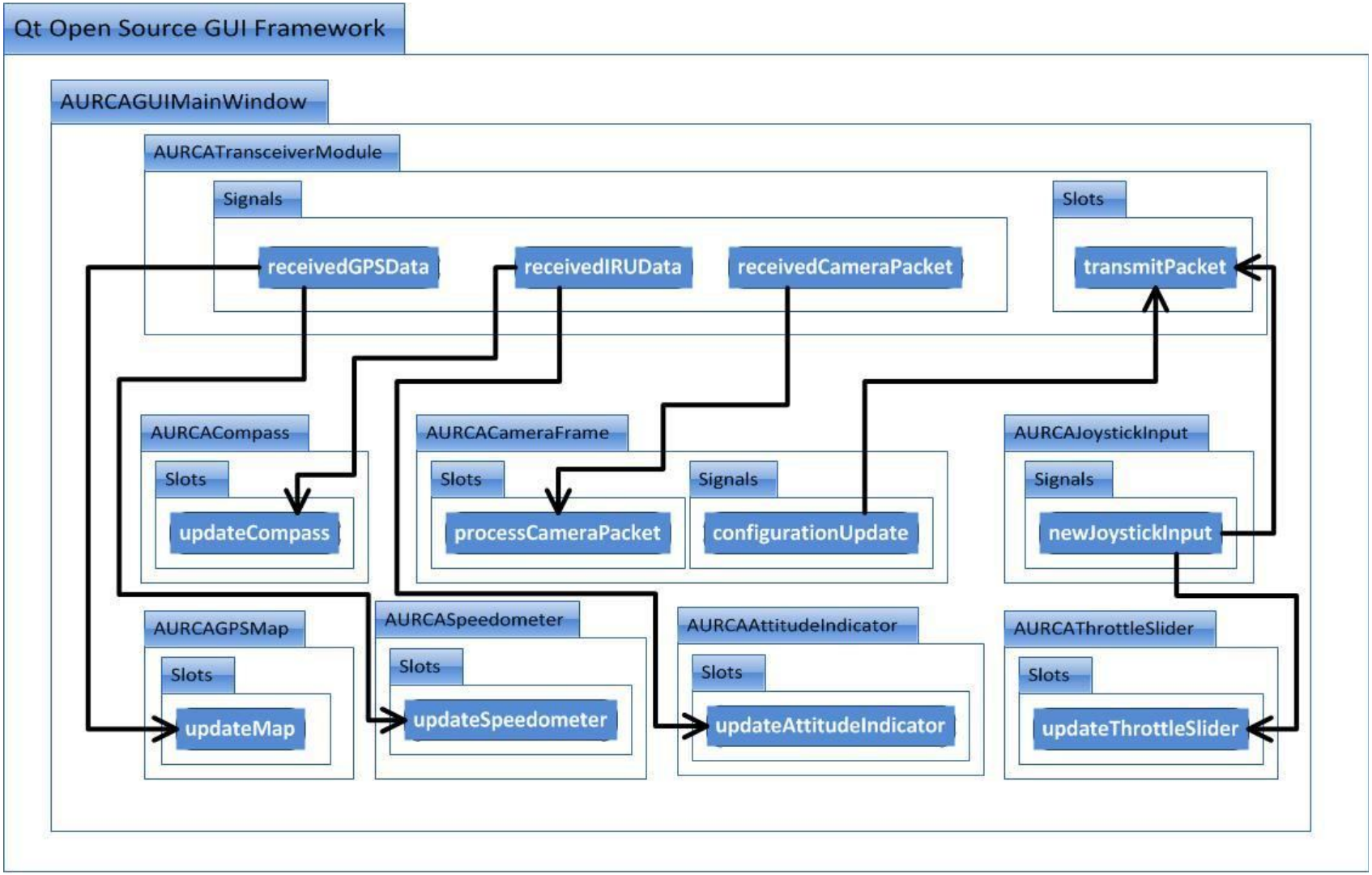

AURCA

On-Board Software Components and Structure

- Microchip MPLab X IDE with C30 Compiler in C
  - All UART serial communication is interrupt driven
  - Serial data received from all components goes into software buffer from ISR
    - Except data received from wireless transceiver
      - Preserves priority for aircraft control data
  - Main loop polls and parses software receive buffers
    - Transmission of sensor data to ground station based on parsing or timer

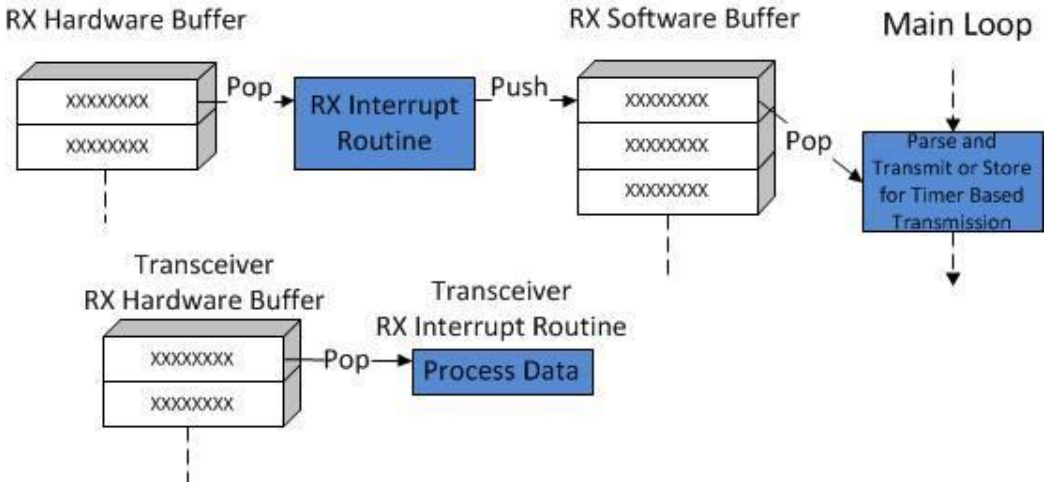

On-Board Software Components and Structure

- Serial data transmitted goes into software buffer
  - Interrupt when hardware transmit buffer has at least one spot in it, fill hardware buffer with data from software buffer
- UART hardware buffers never overflow!

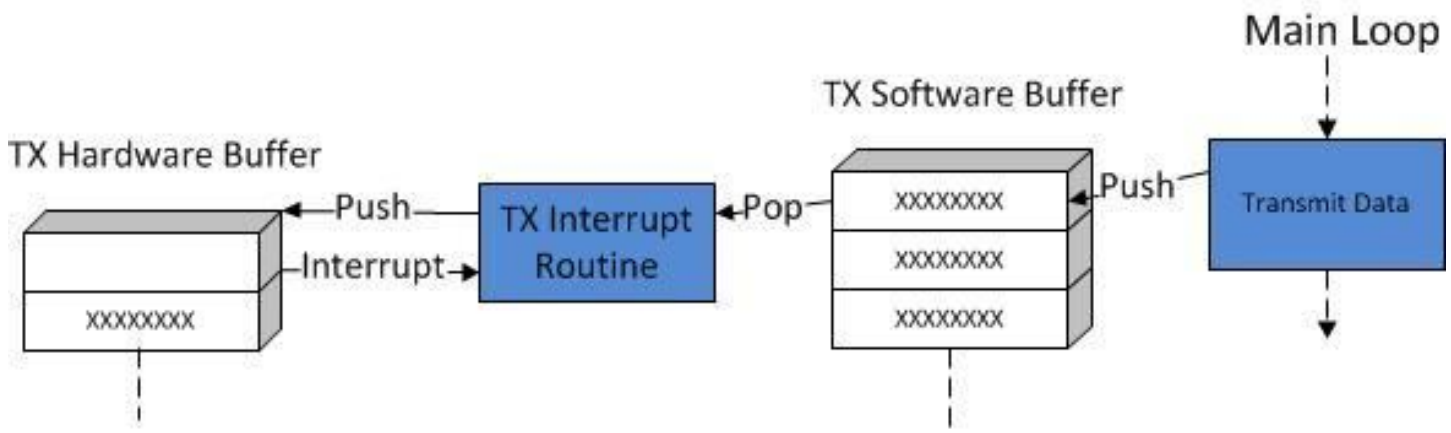

AURCA

Radio Transceiver

Xbee 900 Pro

- Range >300m
- Throughput 156 Kbps
  - 640*480 JPEG = 50kB
- Delay 0.1 - 0.2 sec
- FCC Approved
- ISM 900 MHz
  - Little interference

AURCA

Wireless Communication Protocol

Wireless Packet Structure

Flag	Payload Length	Packet Type	Payload	Checksum

AURCA

Wireless Communication Protocol

Image Chunk Retransmits

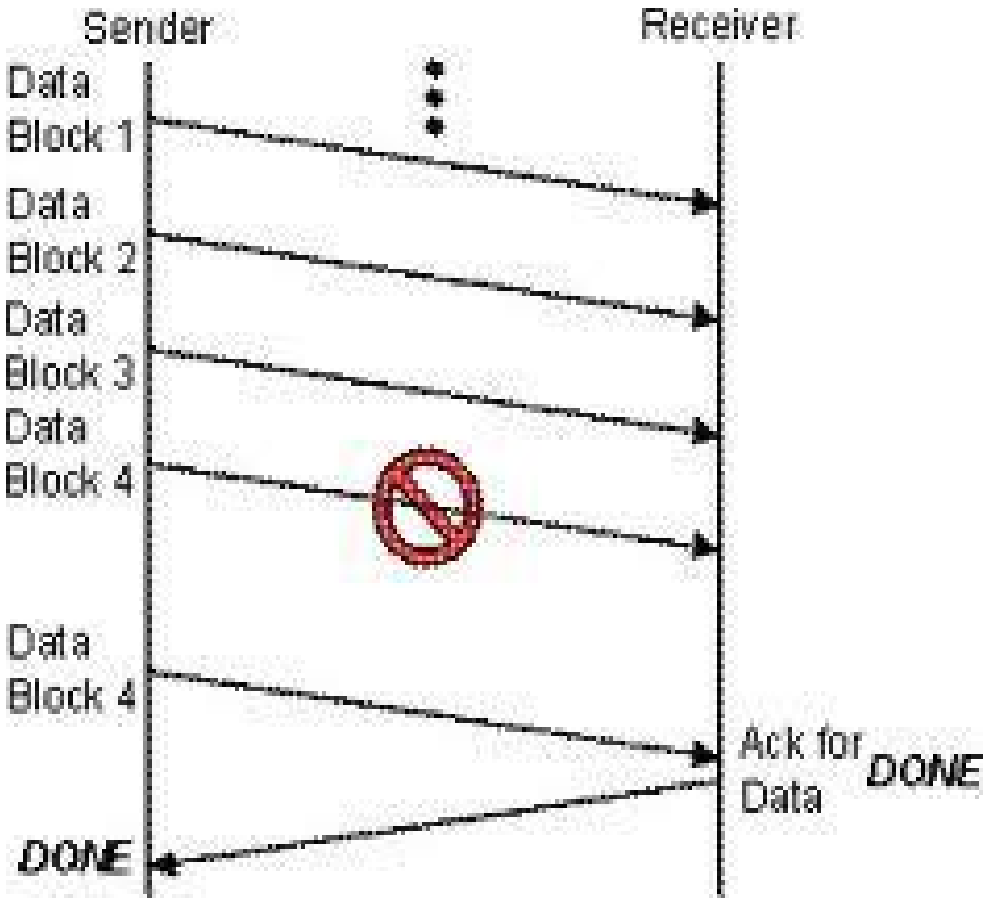

AURCA

Joystick Interface

- Four Axes
  - x - Roll
  - y - Pitch
  - z -Yaw
  - Throttle
- Interrupt driven
  - 25ms or 40Hz
- Deadzone
- Mappable buttons

AURCA

Completed and Populated PCB

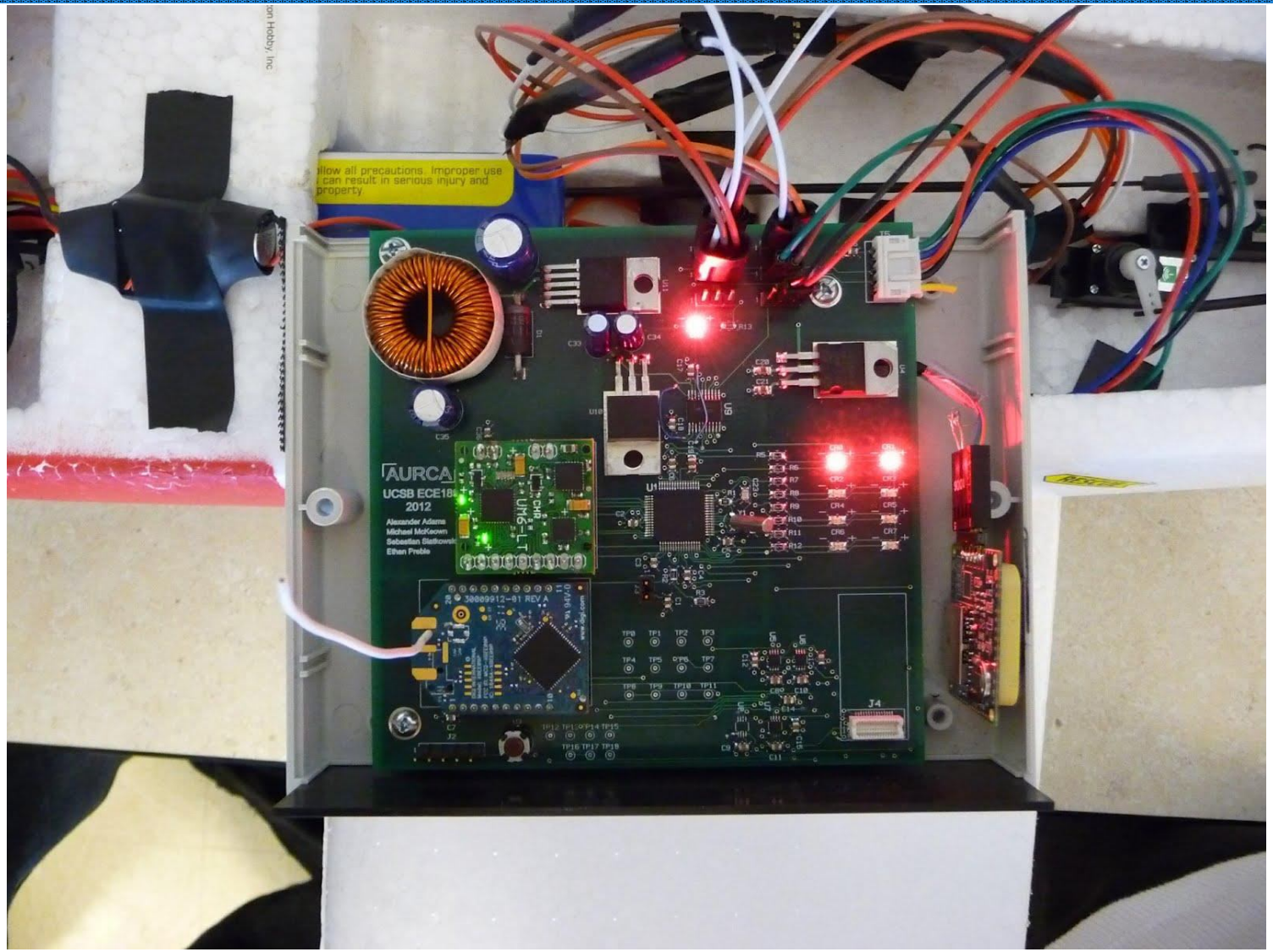

AURCA

Board/Aircraft Integration

AURCA

Camera/Aircraft Integration

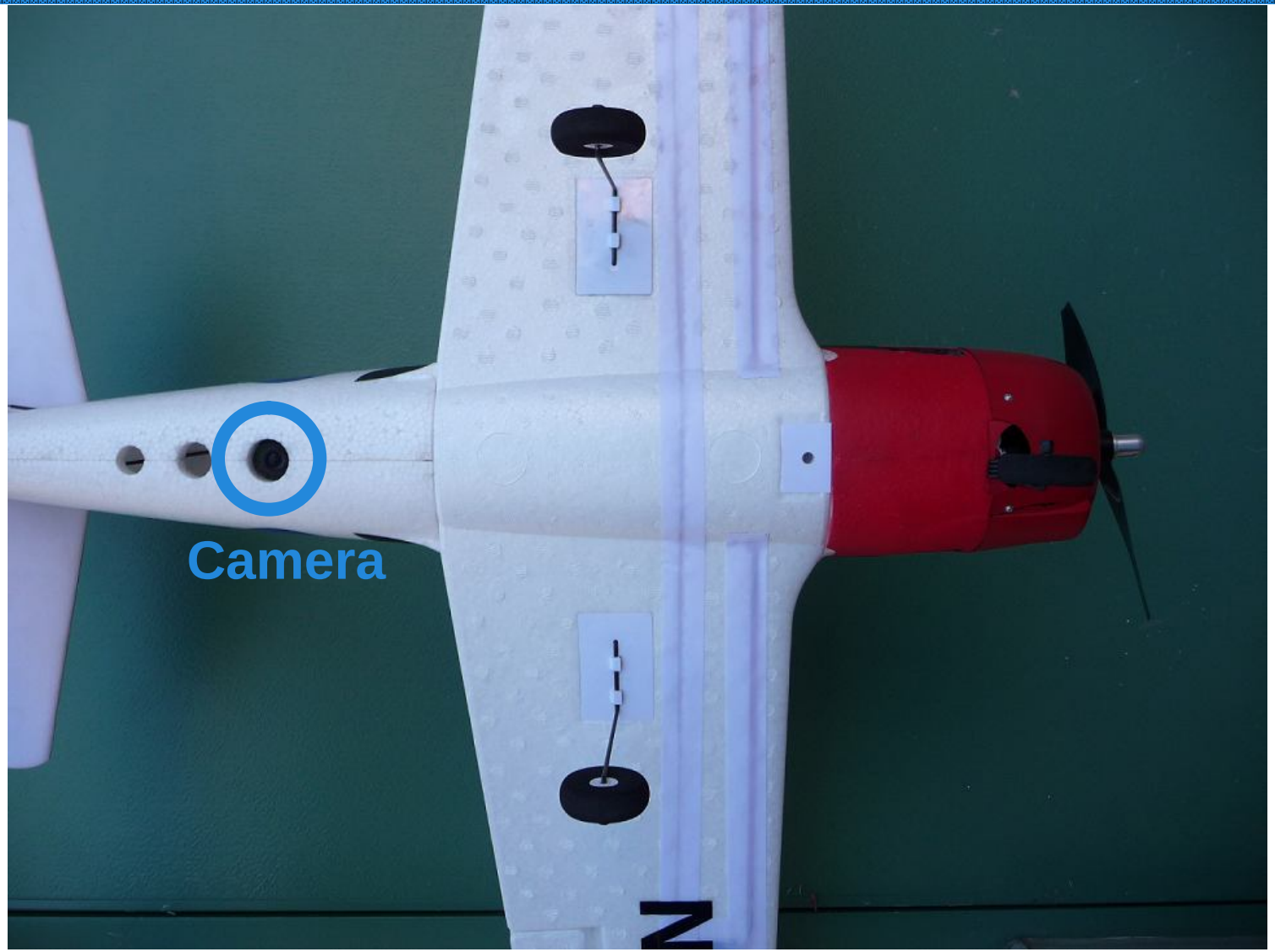

AURCA

Ground Station GUI

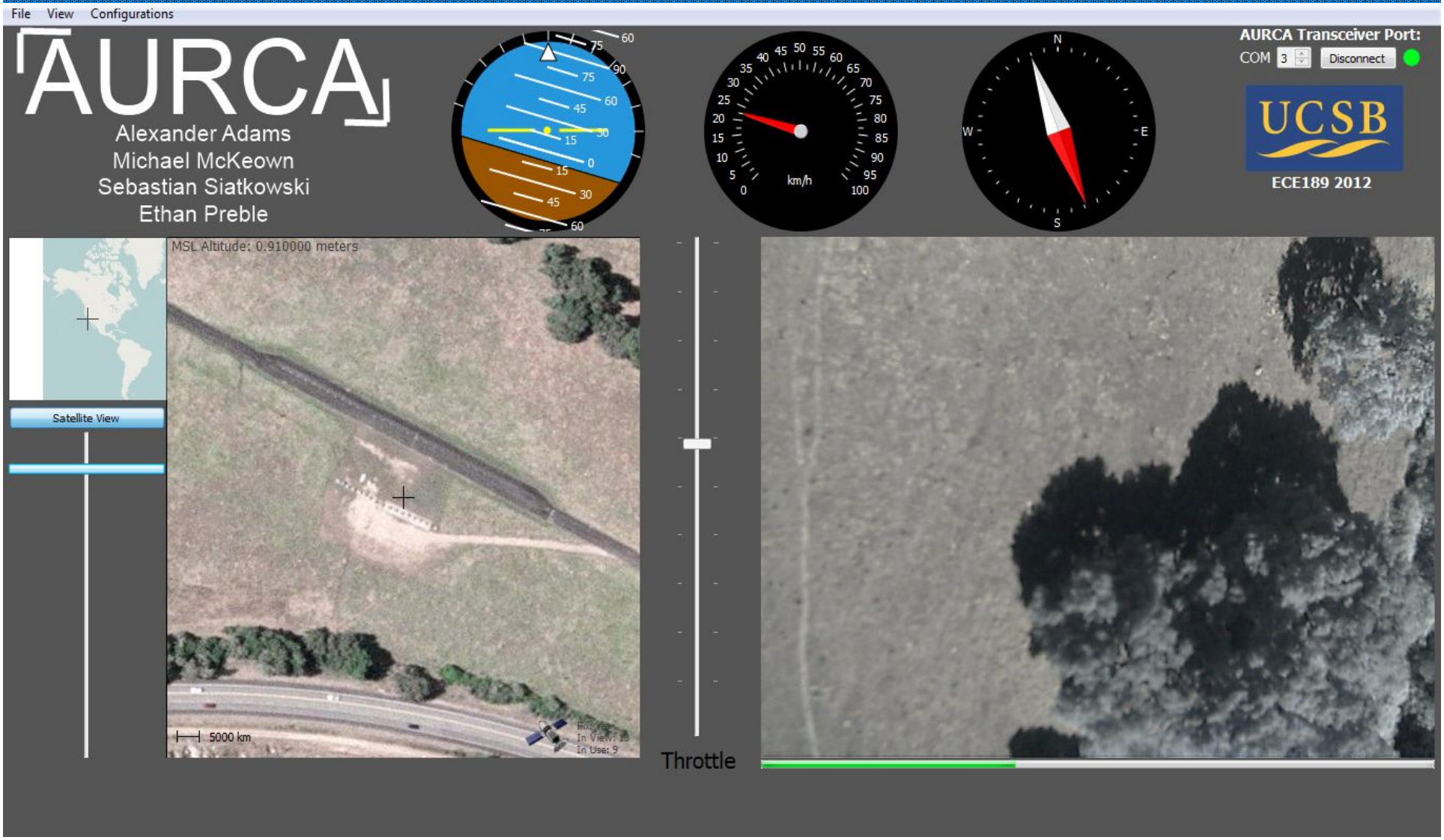

AURCA

Ground Station

AURCA

First Flight

AURCA

First Flight

What Went Wrong & How We Fixed It

- Problem
  - Ailerons engaged on takeoff
- Cause
  - Unintended X-Axis Movement
  - No Deadzone
- Fix
  - Added Joystick Deadzones and rescaled

AURCA

Second Flight

AURCA

Aerial Images

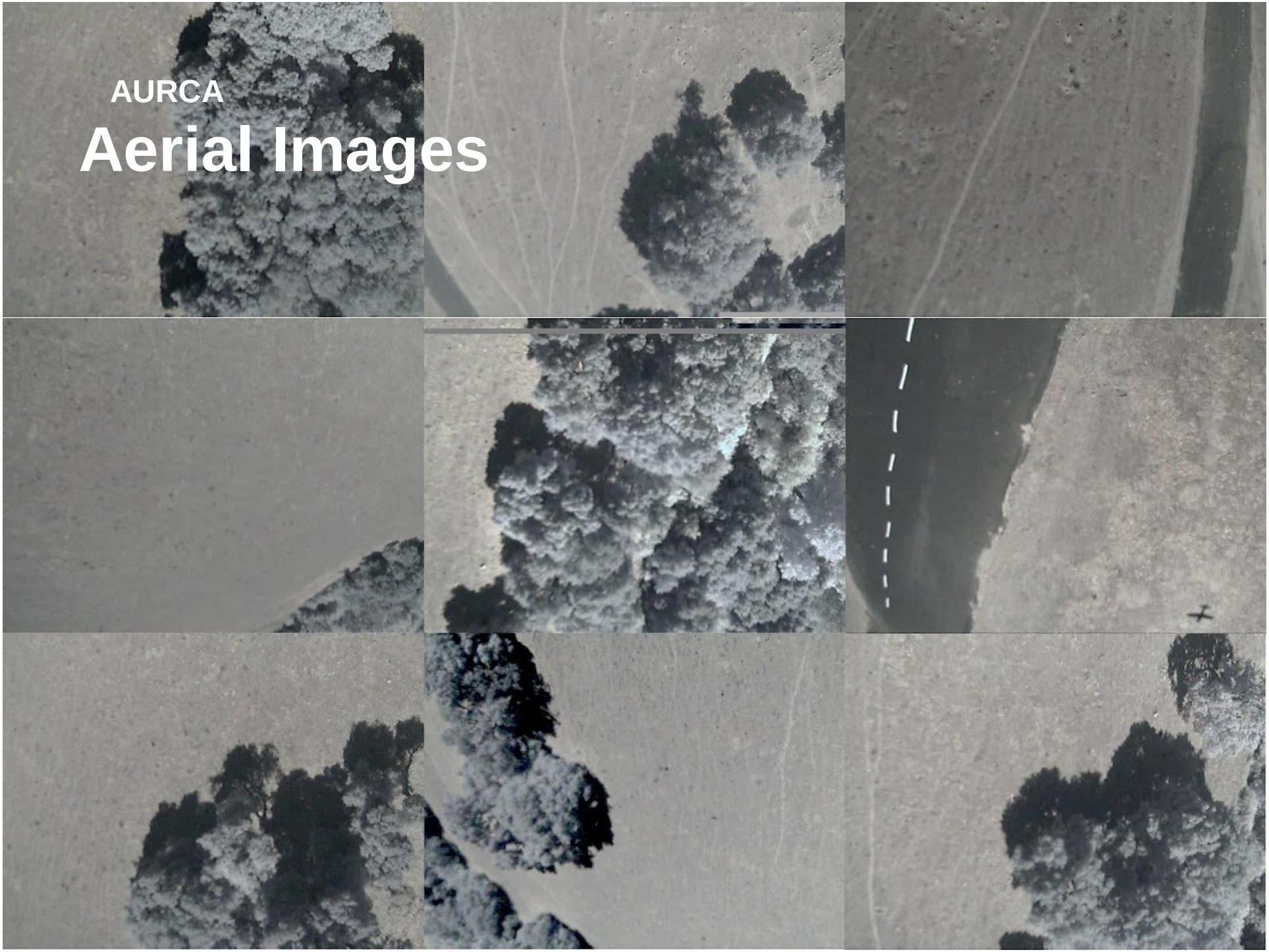

AURCA

Demo

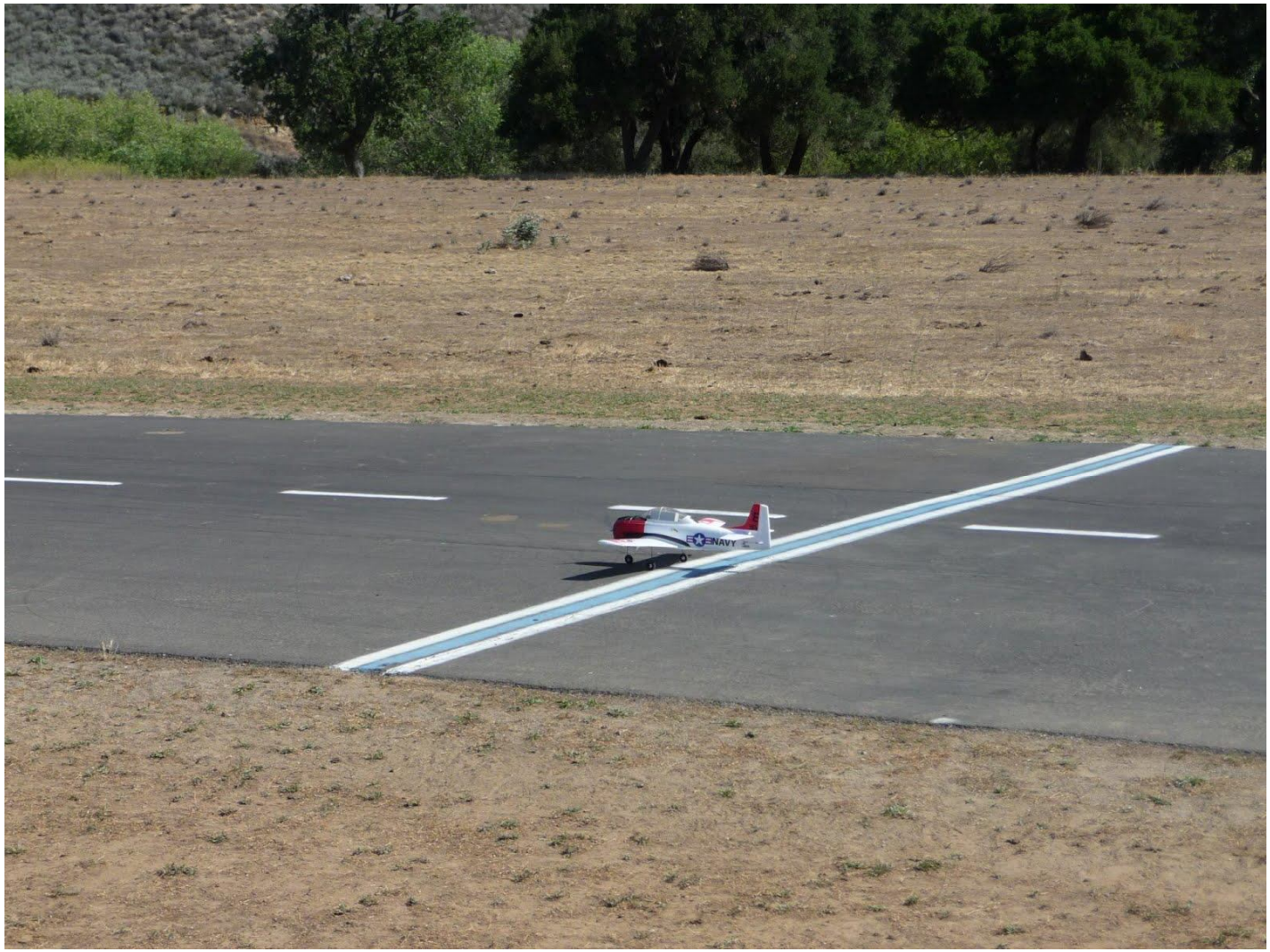

AURCA

Conclusions

- **What we felt we did right**
  - Good organization and teamwork
  - Designing for robustness and reliability
  - Picked an exciting project idea
  - Did not try to do TOO much, we wanted to add a lot more
- **What we felt we did wrong**
  - Left some important parts to the last minute
  - Overly complex components
  - Thoroughness of checking board layout
- **Advice to future Senior Capstone Students**
  - START EARLY!!!
  - Pay attention to all details, do not overlook ANYTHING
  - Pick a project that you think will be fun and will have exciting results. This makes the whole class easier.

AURCA

Thanks to Our Sponsors and Others!

UCSB, ECE Department, Professor Butner, and ECE Shop

SANTA BARBARA RADIO CONTROL MODELERS

SUNSTONE CIRCUITS

sparkfun ELECTRONICS

RAPID PROTOTYPES TECHNOLOGY & MANUFACTURING, LLC

Pololu Robotics & Electronics

CH Robotics

Mentor Graphics

Digi-Key CORPORATION

Microsoft msdn academic alliance Software Center

Qt Code less. Create more. Deploy everywhere.

QUALCOMM

SDL Simple Directmedia Layer

MICROCHIP

AURCA

Q & A