Digital Speech Processing—Lecture 10

Short-Time Fourier Analysis Methods - Filter Bank Design

Review of STFT

1. $$X_{\hat{n}}(e^{j\hat{\omega}}) = \sum_{m=-\infty}^{\infty} x[m]w[\hat{n}-m]e^{-j\hat{\omega}m}$$

- function of $\hat{n}$ (looks like a time sequence)
- function of $\hat{\omega}$ (looks like a transform)

$X_{\hat{n}}(e^{j\hat{\omega}})$ defined for $\hat{n} = 1, 2, 3, \ldots;\ 0 \le \hat{\omega} \le \pi$

2. Interpretations of $X_{\hat{n}}(e^{j\hat{\omega}})$

   1. $\hat{n}$ fixed, $\omega = \hat{\omega}$ variable; $X_{\hat{n}}(e^{j\omega}) = \text{DTFT}\left[x[m]w[\hat{n}-m]\right]$

      $\Rightarrow$DFT View $\Rightarrow$OLA implementation

   2. $n = \hat{n}$ variable, $\hat{\omega}$ fixed; $X_n(e^{j\hat{\omega}}) = x[n]e^{-j\hat{\omega}n} * w[n]$

      $\Rightarrow$Linear Filtering view $\Rightarrow$ filter bank implementation

      $\Rightarrow$ FBS implementation

Review of STFT

3. Sampling Rates in Time and Frequency $\Rightarrow$

recover $x[\hat{n}]$ ***exactly*** from $X_{\hat{n}}(e^{j\hat{\omega}})$

1. time: $W(e^{j\omega})$ has bandwidth of B Hertz $\Rightarrow$

   $2B$ samples/sec rate

   Hamming Window: $B = \frac{2F_S}{L}$(Hz) $\Rightarrow$ sample at

   $\frac{4F_S}{L}$(Hz) or every L/4 samples

2. frequency: $w[n]$ is time limited to L samples $\Rightarrow$

   need at least L frequency samples to avoid time aliasing

Review of STFT

- with OLA method can recover $x(n)$ ***exactly*** using lower sampling rates in either time or frequency, e.g., can sample every L samples (and divide by window), or can use fewer than L frequency samples (filter bank channels); but these methods are highly subject to aliasing errors with any modifications to STFT
- can use windows (LPF) that are longer than L samples and still recover with $N < L$ frequency channels; $\Rightarrow$ e.g., ideal LPF is infinite in time duration, but with zeros spaced N samples apart where F_S / N is the BW of the ideal LPF

Review of STFT

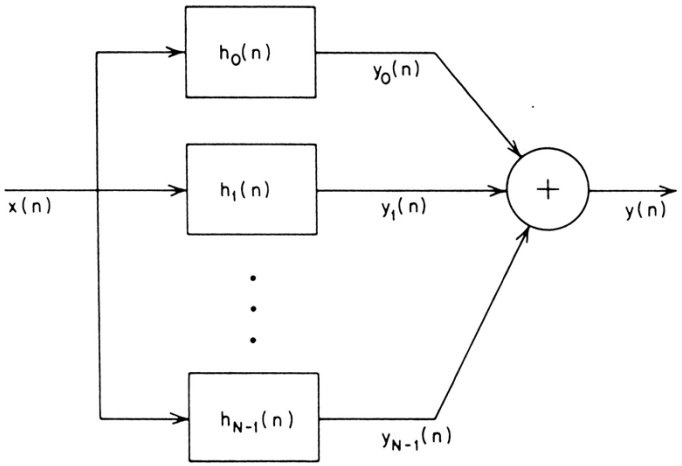

Fig. 6.11 Equivalent linear system relating $y_k(n)$ and $y(n)$ to $x(n)$.

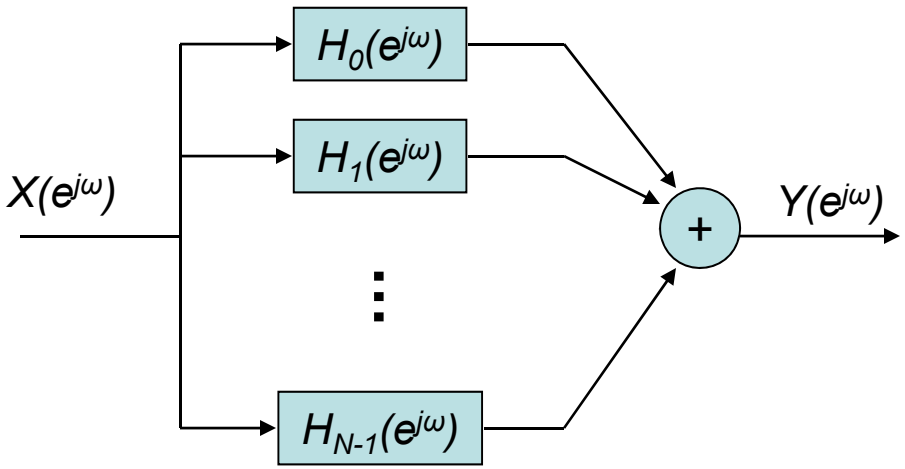

$$h_k[n] = w[n]e^{j\omega_k n}$$

$$\tilde{H}(e^{j\omega}) = \sum_{k=0}^{N-1} H_k(e^{j\omega}) = 1$$

$$\tilde{h}[n] = \sum_{k=0}^{N-1} h_k[n] = \delta[n] = w[n]p[n]$$

$$p[n] = N\sum_{r=-\infty}^{\infty} \delta[n - rN]$$

$$\tilde{h}[n] = N\sum_{r=-\infty}^{\infty} w[rN]\delta[n - rN] = w[0] + w[N] + \ldots$$

$\Rightarrow$ need to design digital filters that match criteria for exact reconstruction of $x[n]$ and which still work with modifications to STFT

Tree-Decimated Filter Banks

Tree-Decimated Filter Banks

- can sample STFT in time and frequency using lowpass filter (window) which is moved in jumps of $R<L$ samples if $L \leq N$ where:
  - L is the window length,
  - R is the window shift, and
  - N is the number of frequency channels
- for a given channel at $\omega=\omega_k$, the sampling rate of the STFT need only be twice the bandwidth of the window Fourier transform
  - down-sample STFT estimates by a factor of R at the transmitter
  - up-sample back to original sampling rate at the receiver
  - final output formed by convolution of the up-sampled STFT with an appropriate lowpass filter, $f[n]$

Filter Bank Channels

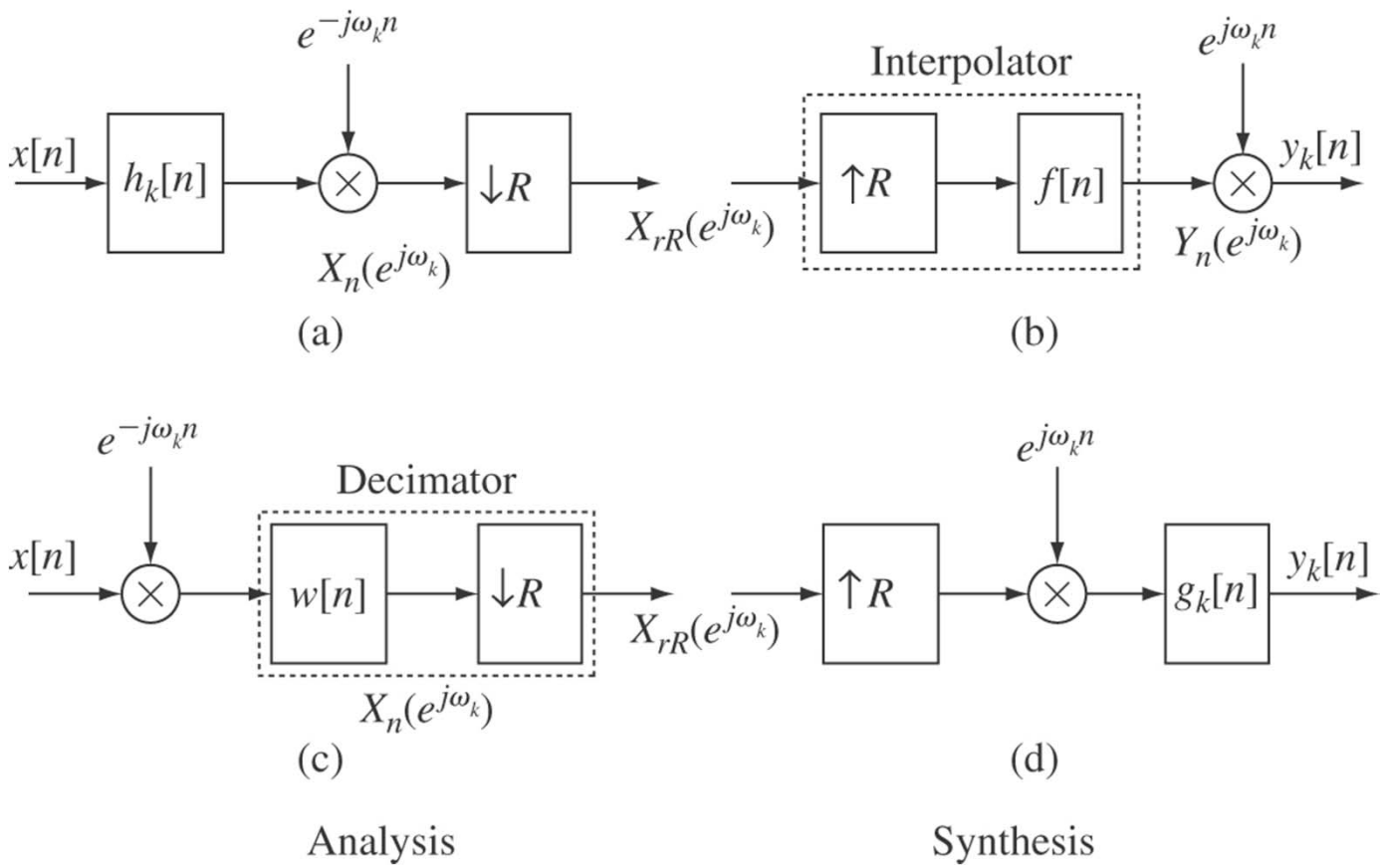

Fully decimated and interpolated filter bank channels; (a) analysis with bandpass filter, down-shifting frequency and down-sampling; (b) synthesis with up-sampler followed by lowpass interpolation filter and frequency up-shift; (c) analysis with frequency down-shift followed by lowpass filter followed by down-sampling; (d) synthesis with up-sampling followed by frequency up-shift followed by bandpass filter.

Full Implementation of Analysis-Synthesis System

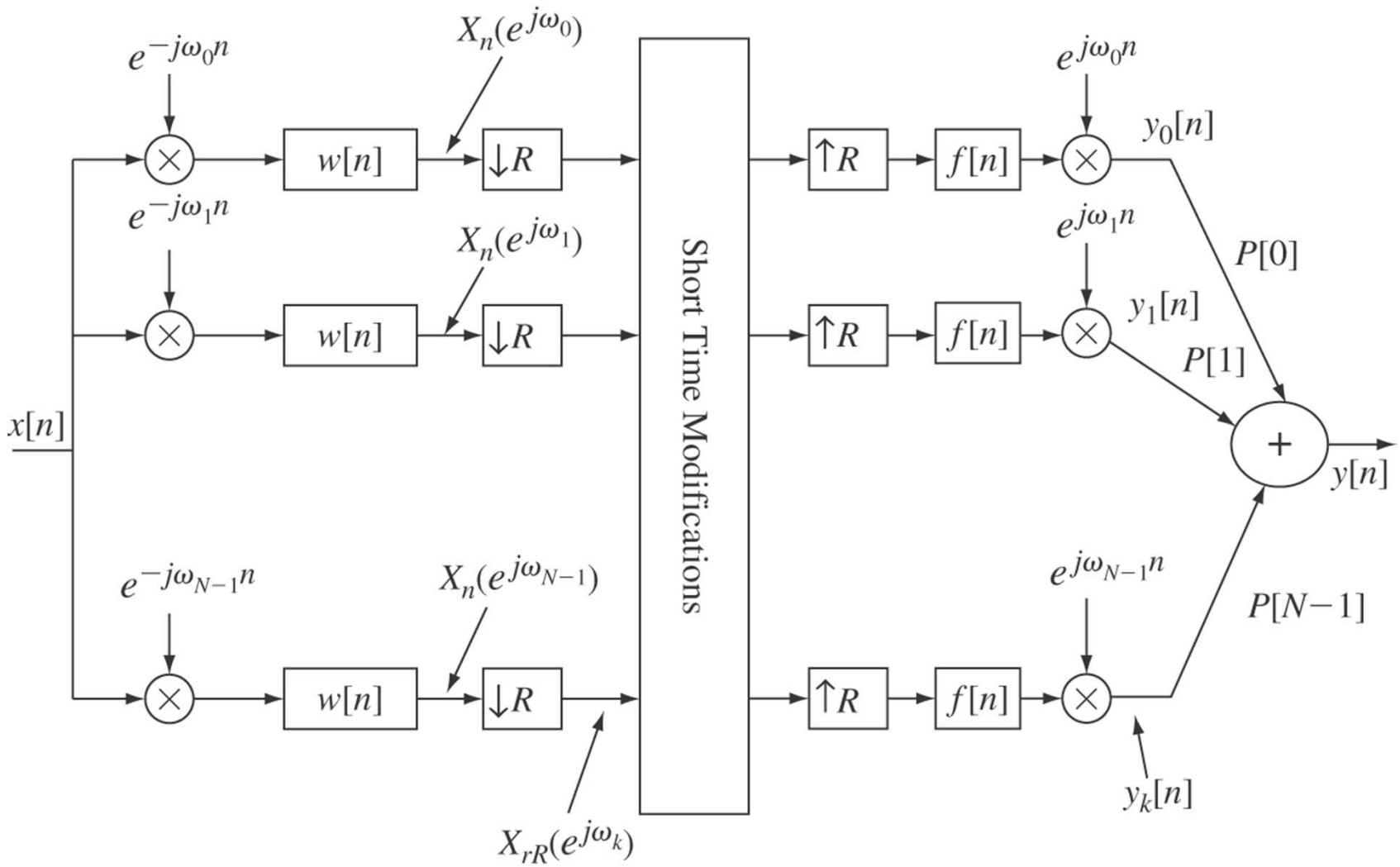

Full implementation of STFT analysis/synthesis system with channel decimation by a factor of *R*, and channel interpolation by the same factor *R* (including a box for short-time modifications.

Review of Down and Up-Sampling

$$x[n] \longrightarrow \boxed{\downarrow R} \longrightarrow x_d[n] = x[nR]$$

$$X_d(e^{j\omega}) = \frac{1}{R}\sum_{r=0}^{R-1} X(e^{j(\omega-2\pi r)/R})$$

- aliasing addition

$$x[n] \longrightarrow \boxed{\uparrow R} \longrightarrow x_u[n] = \begin{cases} x[n/R] & n = 0, \pm 1, \pm 2, \ldots \\ 0 & \text{otherwise} \end{cases}$$

$$X_u(e^{j\omega}) = X(e^{j\omega R})$$

- imaging removal

Filter Bank Reconstruction

- assuming no short time modifications

$$X_{rR}(k) = X_{rR}(e^{j\omega_k}) = \sum_{m \in W_{rR}} w(rR - m)x(m)e^{-j\omega_k m}$$

$$y(n) = \frac{1}{N}\sum_{k=0}^{N-1} P(k)Y_{rR}(e^{j\omega_k})e^{j\omega_k n}$$

$$= \frac{1}{N}\sum_{k=0}^{N-1} P(k)\left[X_{rR}[k]f[n - rR]\right]\ e^{j\omega_k n}$$

$$= \sum_{m \in W_{rR}} x(m)\left[\sum_{r=-\infty}^{\infty} w(rR - m)f(n - rR)\right]\frac{1}{N}\sum_{k=0}^{N-1} P(k)e^{j\omega_k (n-m)}$$

- recognizing that when $P(k) = 1, \forall k$

$$\frac{1}{N}\sum_{k=0}^{N-1} e^{j\omega_k (n-m)} = \sum_{q=-\infty}^{\infty} \delta(n - m - qN)$$

- can show that the condition for $y(n) = x(n), \forall n$ is

$$\sum_{r=-\infty}^{\infty} w(rR - n + qN)f(n - rR) = \delta(q) \Rightarrow m = n$$

Filter Bank Reconstruction

- frequency domain equations, assuming:

$$h_k[n] = w[n]e^{j\omega_k n}; \qquad g_k[n] = f[n]e^{j\omega_k n};$$

$$H_k\left(e^{j\omega_k}\right) = W(e^{j(\omega-\omega_k)}); \quad G_k\left(e^{j\omega_k}\right) = F(e^{j(\omega-\omega_k)});$$

$$Y(e^{j\omega}) = \frac{1}{N}\sum_{k=0}^{N-1} P(k)G_k\left(e^{j\omega_k}\right)\cdot$$

$$\left[\frac{1}{R}\sum_{\ell=0}^{R-1} H_k(e^{j(\omega-\frac{2\pi}{R}\ell)})X(e^{j(\omega-\frac{2\pi}{R}\ell)})\right]$$

$$= X(e^{j\omega})\frac{1}{RN}\sum_{k=0}^{N-1} P(k)G_k\left(e^{j\omega_k}\right)H_k(e^{j\omega})$$

$$+\sum_{\ell=1}^{R-1} X(e^{j(\omega-\frac{2\pi}{R}\ell)})\cdot\frac{1}{RN}\sum_{k=0}^{N-1} P(k)G_k(e^{j\omega_k})H_k(e^{j(\omega-\frac{2\pi}{R}\ell)})$$

$$= \tilde{H}(e^{j\omega})\cdot X(e^{j\omega}) + \text{aliasing terms}$$

Filter Bank Reconstruction

- conditions for perfect reconstruction ($\hat{Y}(e^{j\omega}) = X(e^{j\omega})$)

$$\tilde{H}(e^{j\omega}) = \frac{1}{RN}\sum_{k=0}^{N-1} P(k)G_k(e^{j\omega_k})H_k(e^{j\omega}) = 1$$

Flat Gain

and

$$\frac{1}{RN}\sum_{k=0}^{N-1} P(k)G_k(e^{j\omega_k})H_k(e^{j(\omega-\frac{2\pi}{R}\ell)}) = 0 \quad \text{for } \ell = 1,2,\ldots,R$$

Alias Cancellation

Filter Bank Reconstruction

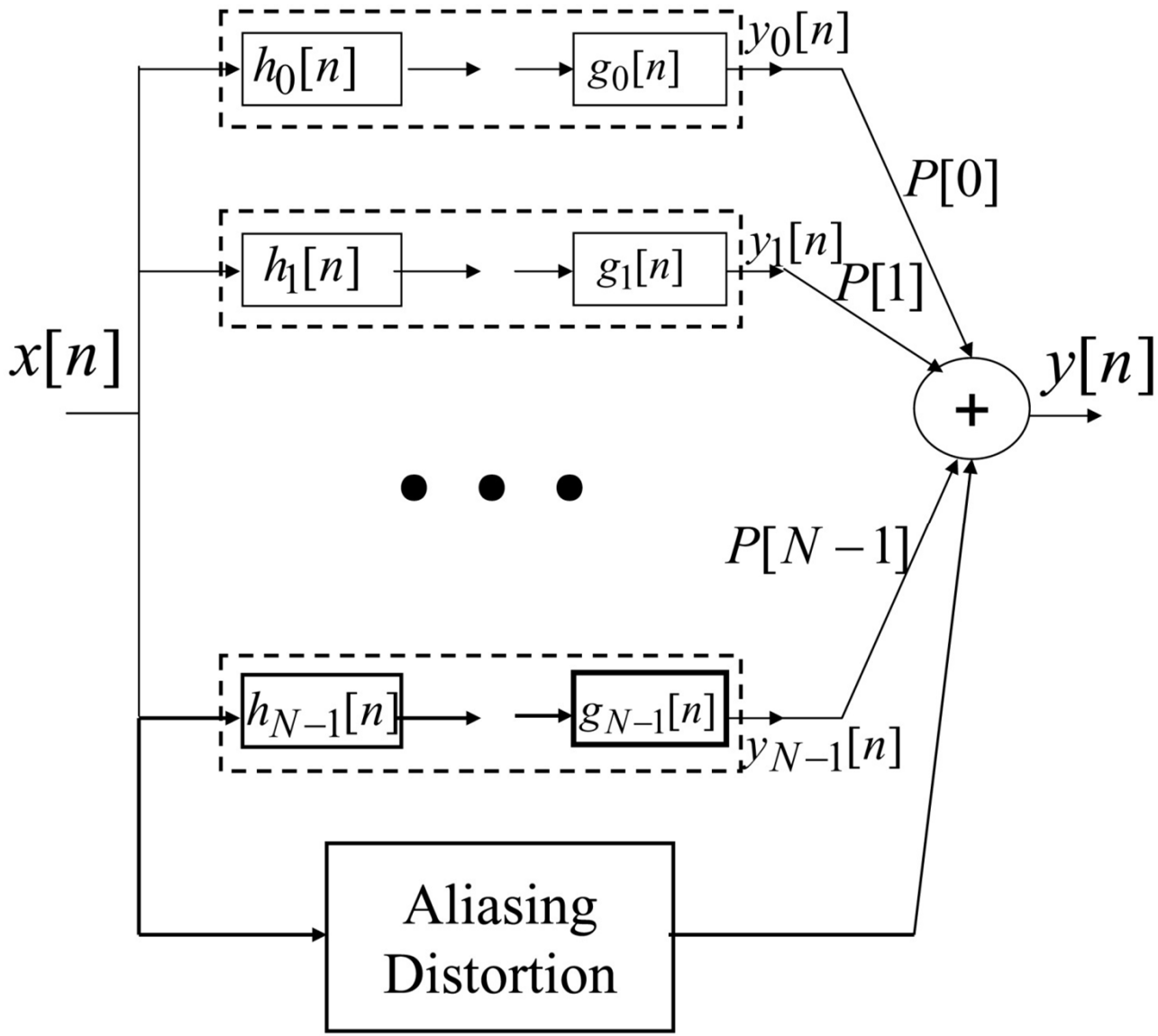

Decimated Analysis-Synthesis Filter Bank

- practical solution for the case $w(n) = f(n)$, $N = R = 2$ (2-band solution)

where the conditions for exact reconstruction become

$$\frac{1}{4}\left[P(0)F(e^{j\omega})W(e^{j\omega}) + P(1)F(e^{j(\omega-\pi)})W(e^{j(\omega-\pi)})\right] = 1$$

and

$$\frac{1}{4}\left[P(0)F(e^{j\omega})W(e^{j(\omega-\pi)}) + P(1)F(e^{j(\omega-\pi)})W(e^{j(\omega-2\pi)})\right] = 0$$

- aliasing cancels exactly if $P(0) = -P(1) = 1$ (with $F(e^{j\omega}) = W(e^{j\omega})$) giving

$$\frac{1}{4}\left[\left(W(e^{j\omega})\right)^2 - \left(W(e^{j(\omega-\pi)})\right)^2\right] = e^{-j\omega M}$$

$$\hat{y}(n) = x(n-M)$$

Decimated Analysis-Synthesis Filter Bank

- when aliasing is completely eliminated (by suitable choice of filters), the overall analysis-synthesis system has frequency response:

$$\tilde{H}(e^{j\omega}) = \frac{1}{RN}\sum_{k=0}^{N-1} P[k] W_e(e^{j(\omega-\omega_k)})$$

where

$$W_e(e^{j\omega}) = W(e^{j\omega})F(e^{j\omega})$$

$$\tilde{h}[n] = w_e[n]\, p[n]$$

where

$$w_e[n] = w[n] * f[n]$$

$$p[n] = \frac{1}{RN}\sum_{k=0}^{N-1} P[k] e^{j\omega_k n}$$

Decimated Analysis-Synthesis Filter Bank

- To design a decimated analysis/synthesis filter bank system, need to determine the following:
  1. the number of channels, N, and the decimation/interpolation ratio R. (Usually determined by the desired frequency resolution)
  2. the window, $w[n]$, and the interpolation filter impulse response, f [n]. (These are lowpass filters that should have good frequency-selective properties such that the bandpass channel responses do not overlap into more than one band on either side of the channel).
  3. the complex gain factors, $P[k]$, $k=0,1,\ldots,N-1$. (These constants are important for achieving flat overall response and alias cancellation.)

Maximally Decimated Filter Banks

- we show here that it is possible to obtain exact reconstruction with $R=N$ and $N<L$.
  - $R=N$ is termed maximal decimation because this is the largest decimation factor that can be used with an N-channel filter bank and still achieve exact reconstruction.
  - nominal bandwidth of the bandpass channel signal is increased from $\pm\pi/N$ to $\pm\pi$
  - down-sampling by N accomplishes frequency down-shifting normally accomplished by modulation

Maximally Decimated Filter Banks

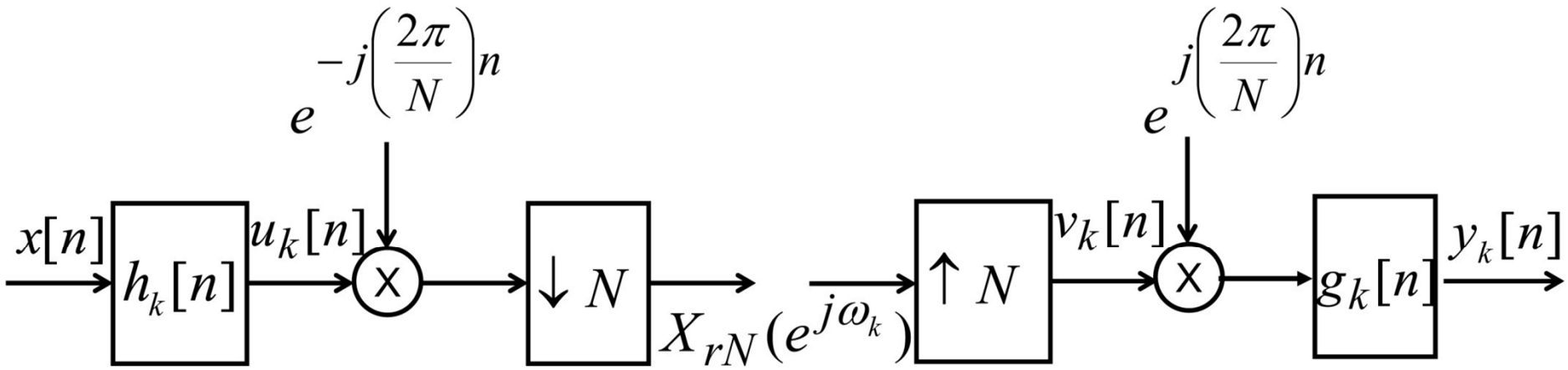

(a)

(b)

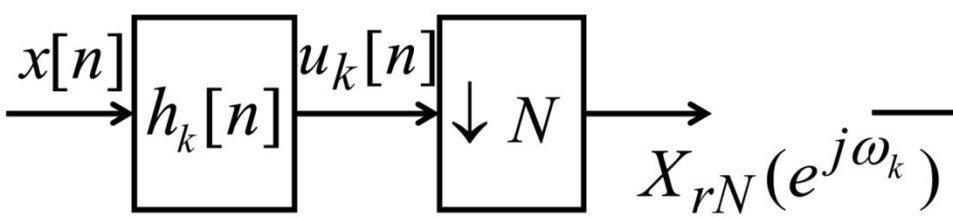

(c)

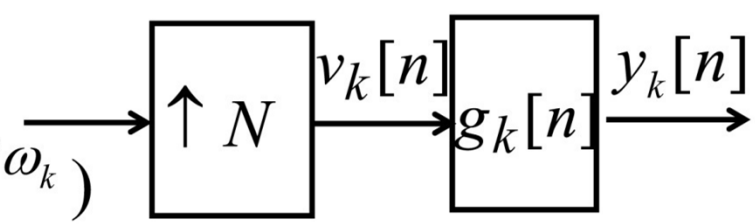

(d)

Analysis

Synthesis

Analysis-Synthesis Filter Bank (all modulators removed)

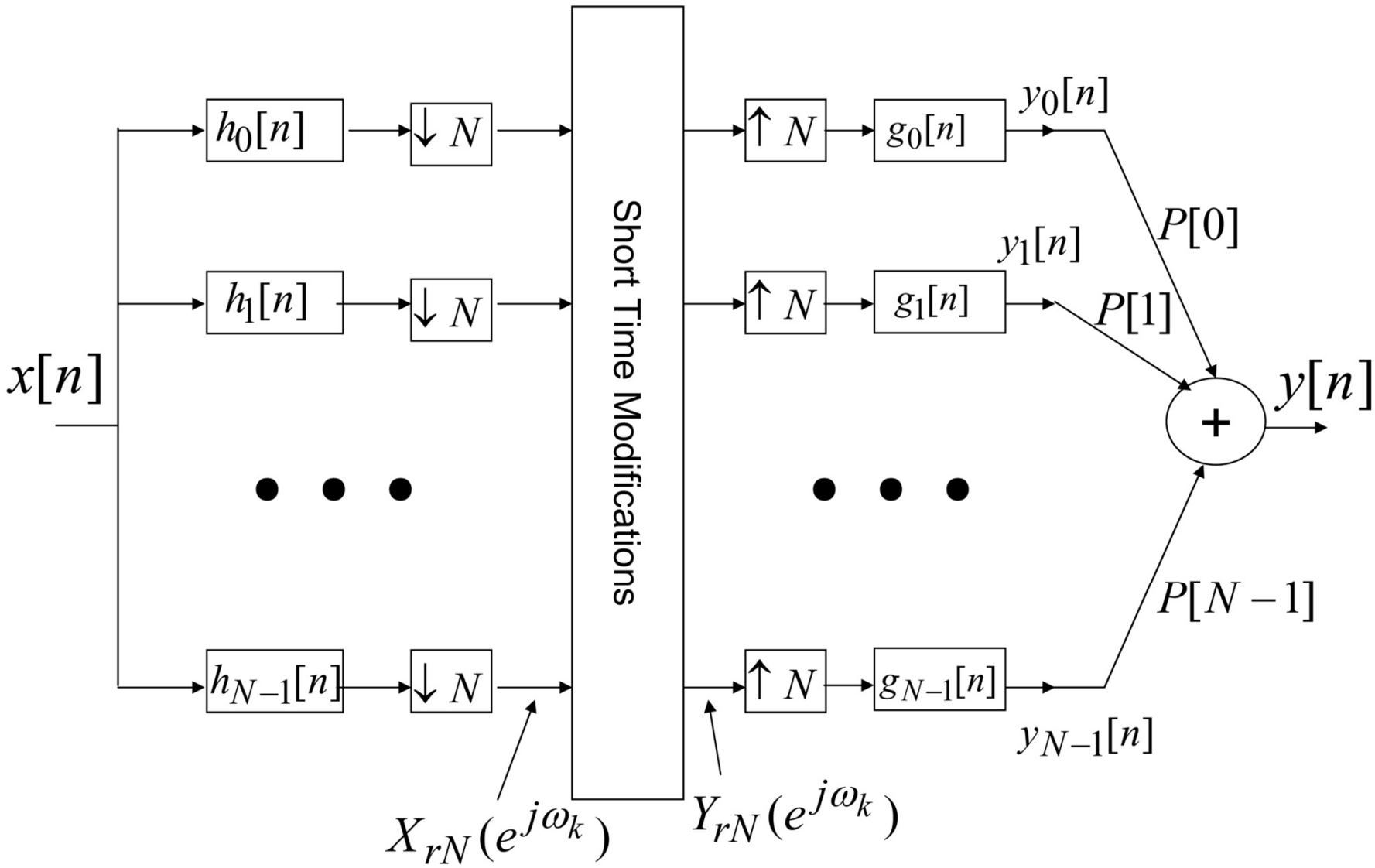

Two Channel Filter Banks

Two Channel Filter Banks

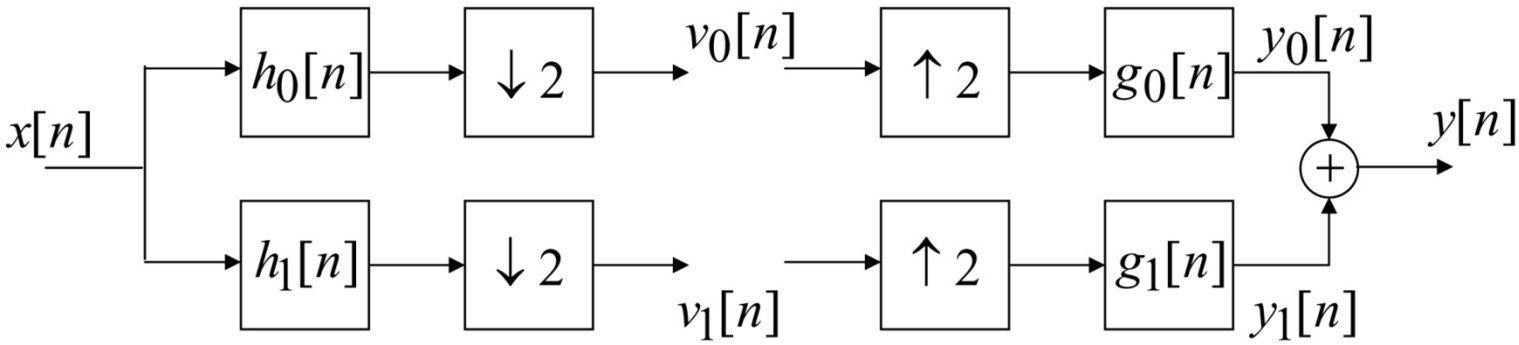

- For this two-band system, we have:

$$R = N = 2; \quad \omega_k = \pi k, \; k = 0,1$$

- Applying the frequency domain analysis we get:

$$Y(e^{j\omega}) = \frac{1}{2}\left[G_0(e^{j\omega})H_0(e^{j\omega}) + G_1(e^{j\omega})H_1(e^{j\omega})\right]X(e^{j\omega})$$

$$+\frac{1}{2}\left[G_0(e^{j\omega})H_0(e^{j(\omega-\pi)}) + G_1(e^{j\omega})H_1(e^{j(\omega-\pi)})\right]X(e^{j(\omega-\pi)})$$

- not including multiplier $1/N$ or the gain factors $P[0], P[1]$
- Aliasing can be eliminated completely by choosing the filters such that:

$$\left[G_0(e^{j\omega})H_0(e^{j(\omega-\pi)}) + G_1(e^{j\omega})H_1(e^{j(\omega-\pi)})\right] = 0 \text{ (aliasing cancelation)}$$

- Perfect reconstruction requires:

$$\frac{1}{2}\left[G_0(e^{j\omega})H_0(e^{j\omega}) + G_1(e^{j\omega})H_1(e^{j\omega})\right] = 1 \qquad \text{(flat gain condition)}$$

Quadrature Mirror Filter (QMF) Banks

- Alias cancellation achieved if the filters are chosen to satisfy the conditions:

$$h_1[n] = e^{j\pi n} h_0[n] \quad \Leftrightarrow \quad H_1(e^{j\omega}) = H_0(e^{j(\omega-\pi)})$$

$$g_0[n] = 2h_0[n] \quad \Leftrightarrow \quad G_0(e^{j\omega}) = 2H_0(e^{j\omega})$$

$$g_1[n] = -2h_1[n] \quad \Leftrightarrow \quad G_1(e^{j\omega}) = -2H_0(e^{j(\omega-\pi)})$$

- Note that there is only a single lowpass filter, with impulse response $h_0[n]$ on which all other filters are based; filter has nominal cutoff of $\pi/2$ rad with a narrow transition to a stopband with adequate attenuation to isolate the two bands
- The filter $h_1[n] = e^{j\pi n} h_0[n]$ is the complementary highpass filter
- The filters $h_0[n]$ and $h_1[n]$ are called Quadrature Mirror Filters (QMF)

Quadrature Mirror Filter (QMF) Banks

- Substituting for the filter relationships we get:

$$2H_0(e^{j\omega})H_0(e^{j(\omega-\pi)}) - 2H_0(e^{j(\omega-\pi)})H_0(e^{j(\omega-2\pi)}) = 0$$

i.e., perfect alias cancellation for any choice of lowpass filter

$$Y(e^{j\omega}) = \left[\left(H_0(e^{j\omega})\right)^2 - \left(H_0(e^{j(\omega-\pi)})\right)^2\right] X(e^{j\omega}) = \tilde{H}(e^{j\omega})X(e^{j\omega})$$

- For perfect reconstruction we require that:

$$\left[\left(H_0(e^{j\omega})\right)^2 - \left(H_0(e^{j(\omega-\pi)})\right)^2\right] = e^{-j\omega M}$$

i.e., flat magnitude with delay of M samples, due to the delay of the causal filters of the filter bank

Quadrature Mirror Filters

- Assume FIR lowpass filter of length L samples such that $h_0[n] = h_0[(L-1)-n],\ 0 \le n \le L-1$; this filter has linear phase with a delay of $(L-1)/2$ samples and a frequency response of the form:

$$H_0(e^{j\omega}) = A_0(e^{j\omega})e^{-j\omega(L-1)/2} \qquad (L-1) \text{ must be odd}$$

where $A_0(e^{j\omega})$ is real. Using this lowpass filter in the filter bank, the condition for perfect reconstruction becomes:

$$\tilde{H}(e^{j\omega}) = \left[\left(A_0(e^{j\omega})\right)^2 - e^{j\pi(L-1)}\left(A_0(e^{j(\omega-\pi)})\right)^2\right]e^{-j\omega(L-1)}$$

- If $L-1$ is odd, we get:

$$\tilde{H}(e^{j\omega}) = \left[\left(A_0(e^{j\omega})\right)^2 + \left(A_0(e^{j(\omega-\pi)})\right)^2\right]e^{-j\omega(L-1)}$$

- linear phase is guaranteed, but not perfect reconstruction

Quadrature Mirror Filters

- For flat gain we need to satisfy the condition:

$$\left[\left(A_0(e^{j\omega})\right)^2 + \left(A_0(e^{j(\omega-\pi)})\right)^2\right] = 1$$

- Solution is to use high order linear phase QMF filters
- Johnston proposed an algorithm for design of the basic lowpass filter that minimized the deviation from unity while providing a desired level of stopband attenuation

Quadrature Mirror Filters

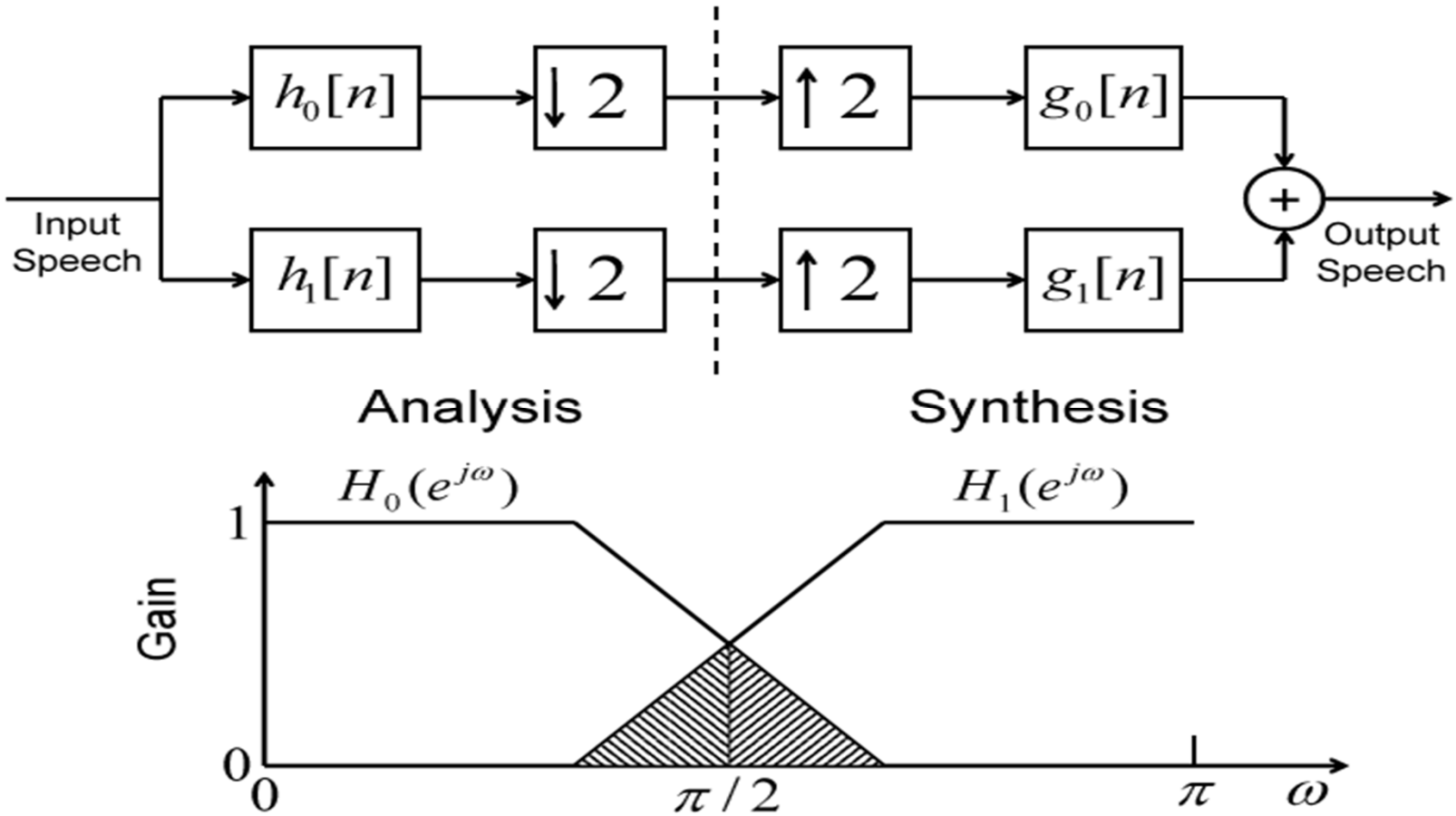

$$h_0[n] = w[n] = g_0[n] \qquad h_1[n] = w[n]e^{j\pi n} = g_1[n]$$

Quadrature Mirror Filters

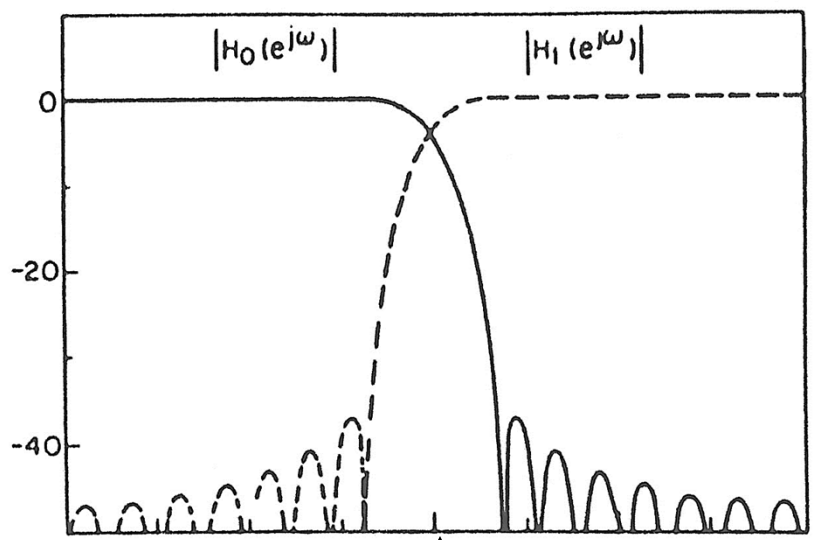

Lowpass filter designed by windowing

Highpass filter is mirror image of lowpass filter

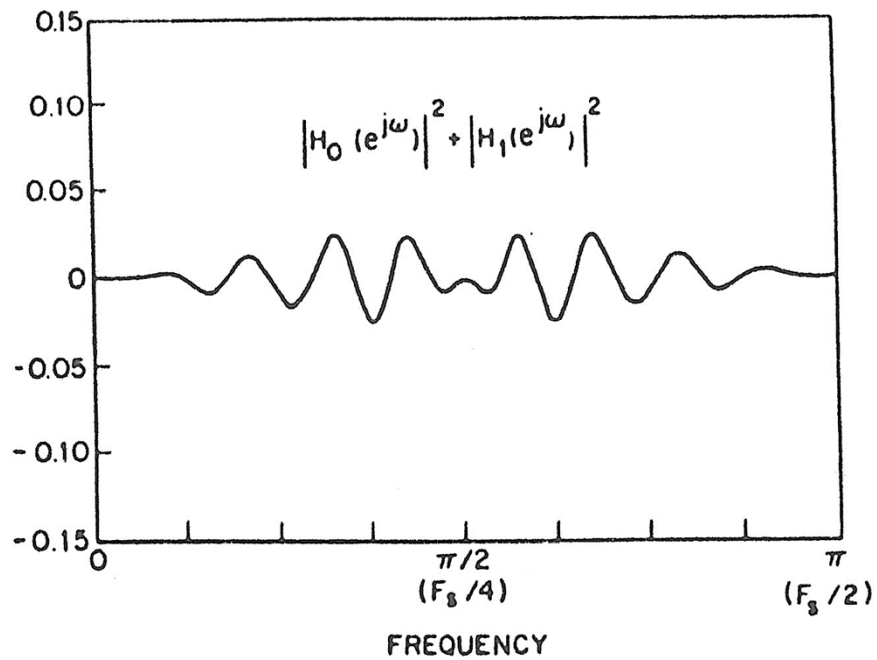

- practical realization of QMF filters
- note that aliasing is cancelled, but the overall frequency response is not perfectly flat

Quadrature Mirror Filters

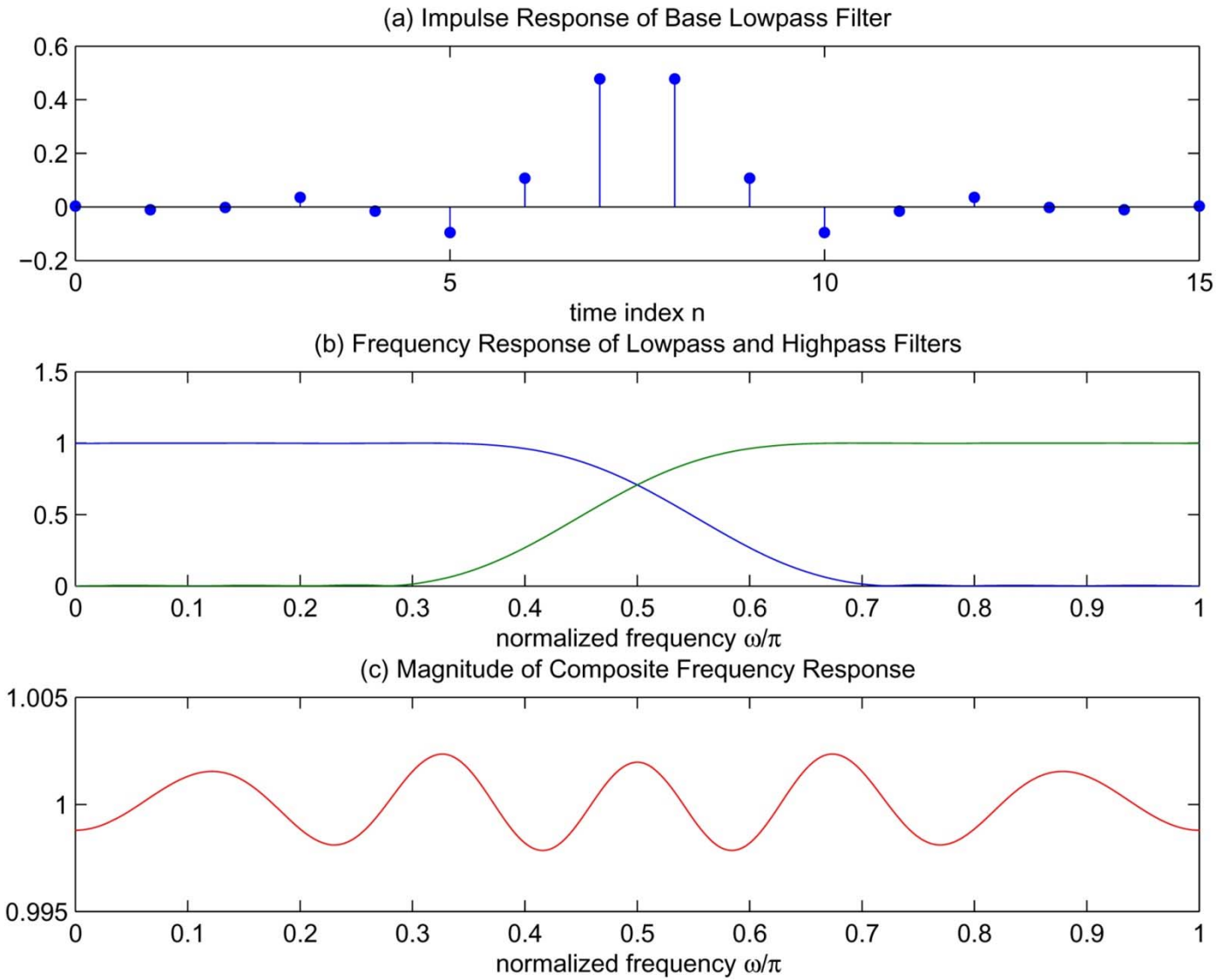

Issues with Perfect Reconstruction

- The motivation for the subband approach is to process different speech properties independently in each band and thus being able to localize the band (compact bandwidth) is important.
- Also,based on the original motivation of short-time analysis, temporal focus (within a limited time duration) is also important.
- Filter bank design is thus result of a trade-off between perfect reconstruction and bandwidth concentration in a joint criterion:

$$J = \alpha \underbrace{\int_{\omega_s}^{\pi} |W(e^{j\omega})|^2 \, d\omega}_{\text{Stop-band leakage}} + (1-\alpha) \underbrace{\int_{0}^{\pi} (1 - |T(e^{j\omega})|^2) d\omega}_{\text{Deviation from PR}}$$

- When processing (e.g., quantization, a non-linear operation) is involved, harmonic distortions are inevitable and perfect reconstruction cannot be achieved, as seen in the simple example.
- There exists a design procedure (Smith-Barnwell) for QMF filters that attempts to meet the design constraints as best as possible

Smith-Barnwell QMF Design

1. Start with a sequence of length, say, 2L-1 (L even) that satisfies $g(n)+(-1)^n g(n) = 2C_0\delta(n)$; that is, even samples=0, except at n=0. C_0 , the value of the sequence at n=0, needs to be large enough to satisfy the positivity condition (see below).
2. Factor $G(z) = \mathcal{Z}\{g(n)\} = W_0(z)W_0(z^{-1})$

   such that all roots of $W(z)$ are inside the unit circle.
3. Positivity condition: $G(e^{j\omega}) = W_0(e^{j\omega})W_0(e^{-j\omega}) = \left|W_0(e^{j\omega})\right|^2 > 0$
4. The mirror channel: $W_1(e^{j\omega}) = -W_0(-e^{-j\omega})e^{-j\omega N}, \quad N = L-1$

   $W_1(z) = -W_0(-z^{-1})z^{-N}$ or equivalently $w_1(n) = (-1)^n w_0(N-n)$
5. To eliminate aliasing: $F_0(z) = W_1(-z)$ and $F_1(z) = -W_0(-z)$

   $F_0(z) = W_1(-z)$ or equivalently $f_0(n) = (-1)^n w_1(n)$

   $F_1(z) = -W_0(-z)$ or equivalently $f_1(n) = -(-1)^n w_0(n)$

Smith-Barnwell QMF Design - Example

$L = 8,\ N = L - 1 = 7$ $\qquad G(z) = \mathcal{Z}\{g(n)\} = W_0(z)W_0(z^{-1})$

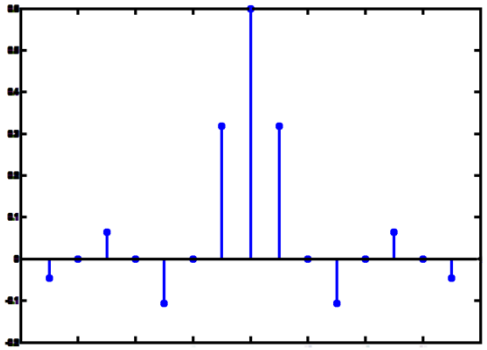

Length of $w_0(n) = L$, then $g(n)$ has length $2L - 1$

choose $g(n) = \dfrac{\sin(\pi n/2)}{\pi n}, \quad n = 0, \pm 1, \pm 2, \cdots, \pm 7$

$$g(n) = [-0.0455 \quad 0.0000 \quad 0.0637 \quad -0.0000 \quad -0.1061 \quad 0.0000 \quad 0.3183$$
$$0.6 \quad 0.3183 \quad 0.0000 \quad -0.1061 \quad -0.0000 \quad 0.0637 \quad 0.0000 \quad -0.0455]$$

at $n = 0$, 0.1 is added to satisfy th e positivity condition

Factorize $\quad G(z) = W_0(z)W_0(z^{-1}) \qquad W_0(z)$: length L with all roots inside the unit circle

$$w_0(n) = [1 \quad 0.8091 \quad 0.3426 \quad -0.2332 \quad -0.2032 \quad 0.1590 \quad 0.1182 \quad -0.1461]$$

$$w_1(n) = (-1)^n w_0(N-n) = [-0.1461 \quad -0.1182 \quad 0.1590 \quad 0.2032 \quad -0.2332 \quad -0.3426 \quad 0.8091 \quad -1]$$

$$f_0(n) = (-1)^n w_1(n) = [-0.1461 \quad 0.1182 \quad 0.1590 \quad -0.2032 \quad -0.2332 \quad 0.3426 \quad 0.8091 \quad 1]$$

$$f_1(n) = -(-1)^n w_0(n) = [-1 \quad 0.8091 \quad -0.3426 \quad -0.2332 \quad 0.2032 \quad 0.1590 \quad -0.1182 \quad -0.1461]$$

all arrays start with n=0

QMF Frequency Responses (Example)

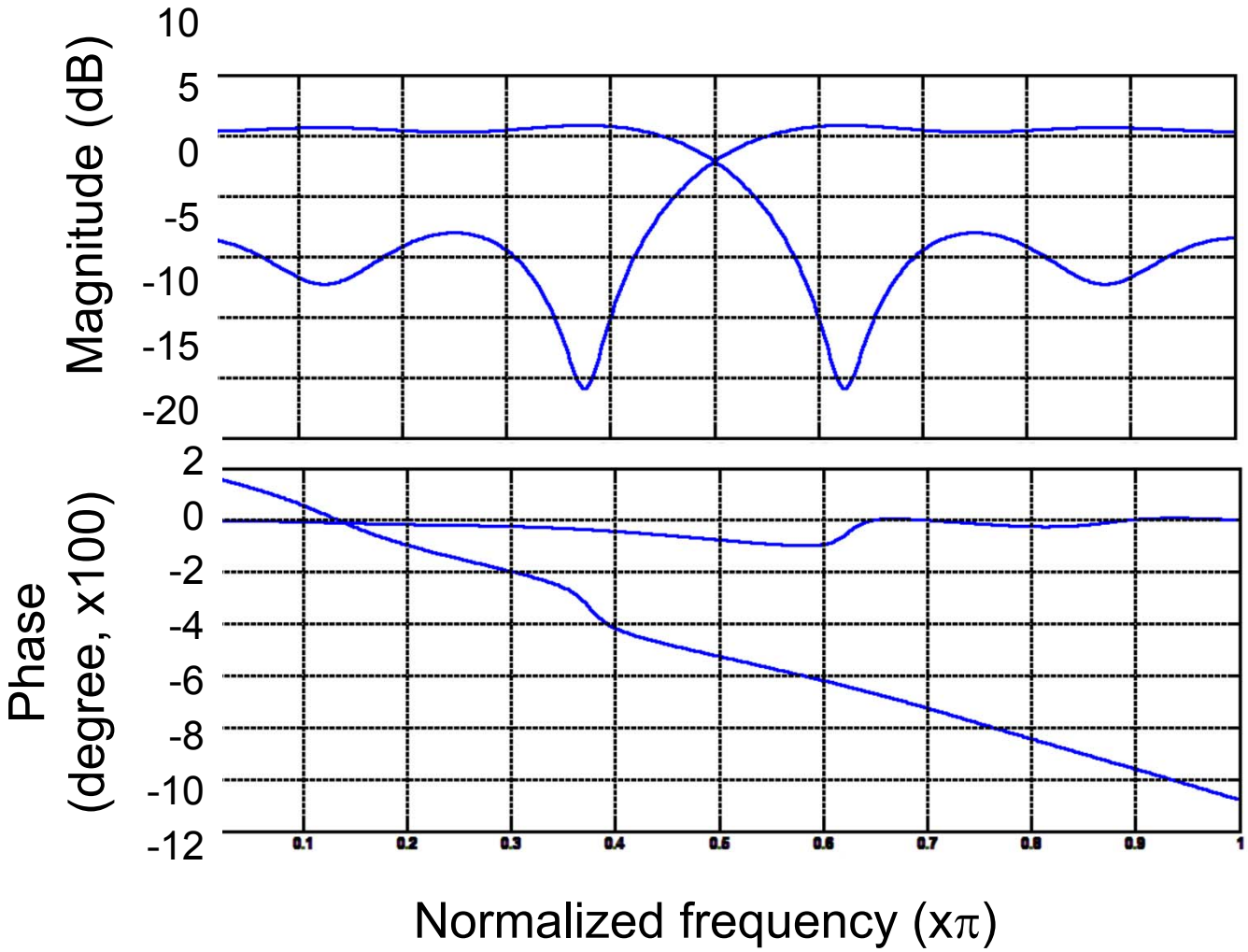

Tree-Structured Filter Banks

Tree-Structured Filter Banks

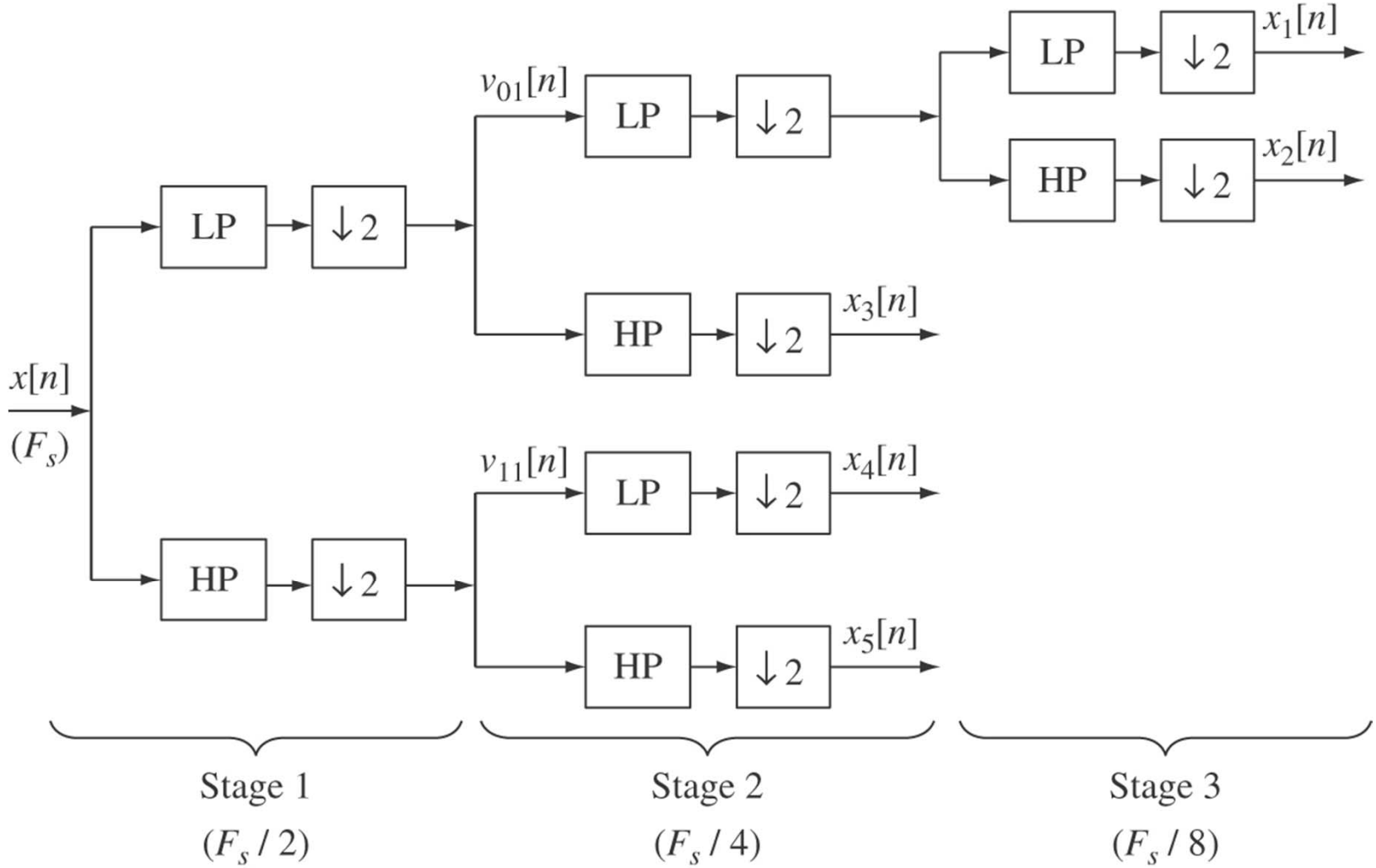

Sampling Pattern for Tree-Structured Filter Banks

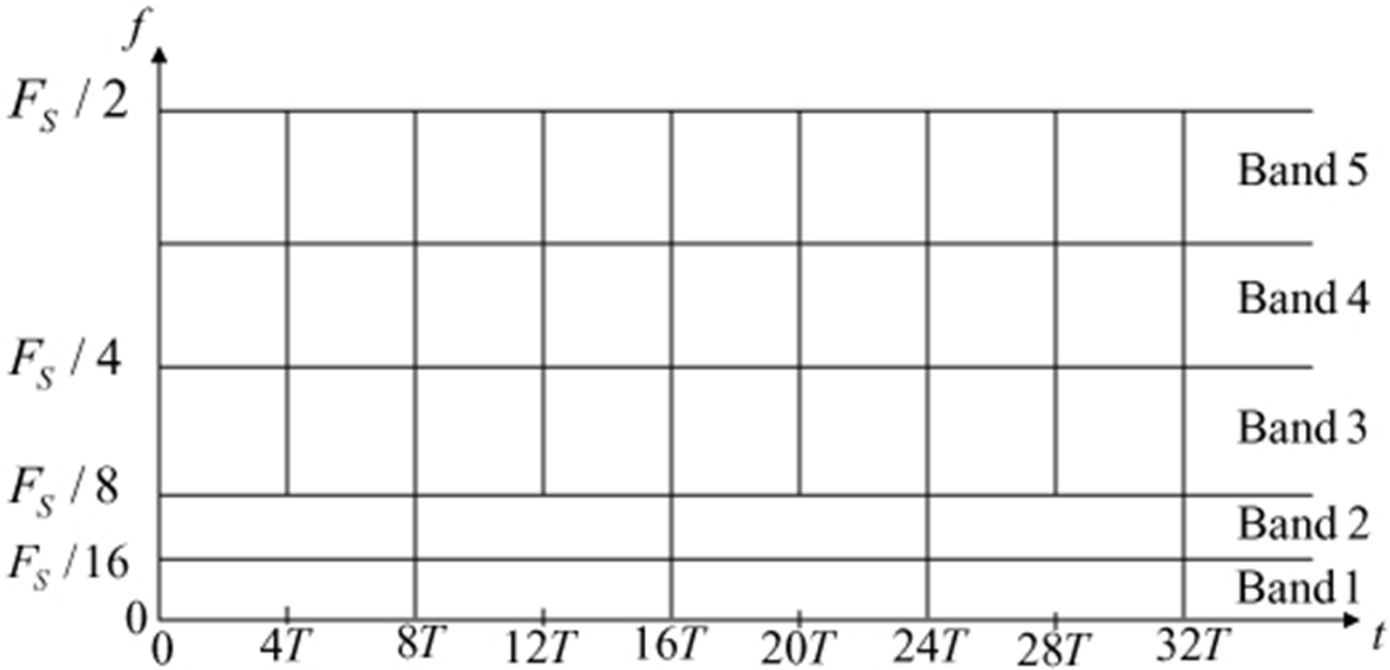

Tree-Structured Filter Banks

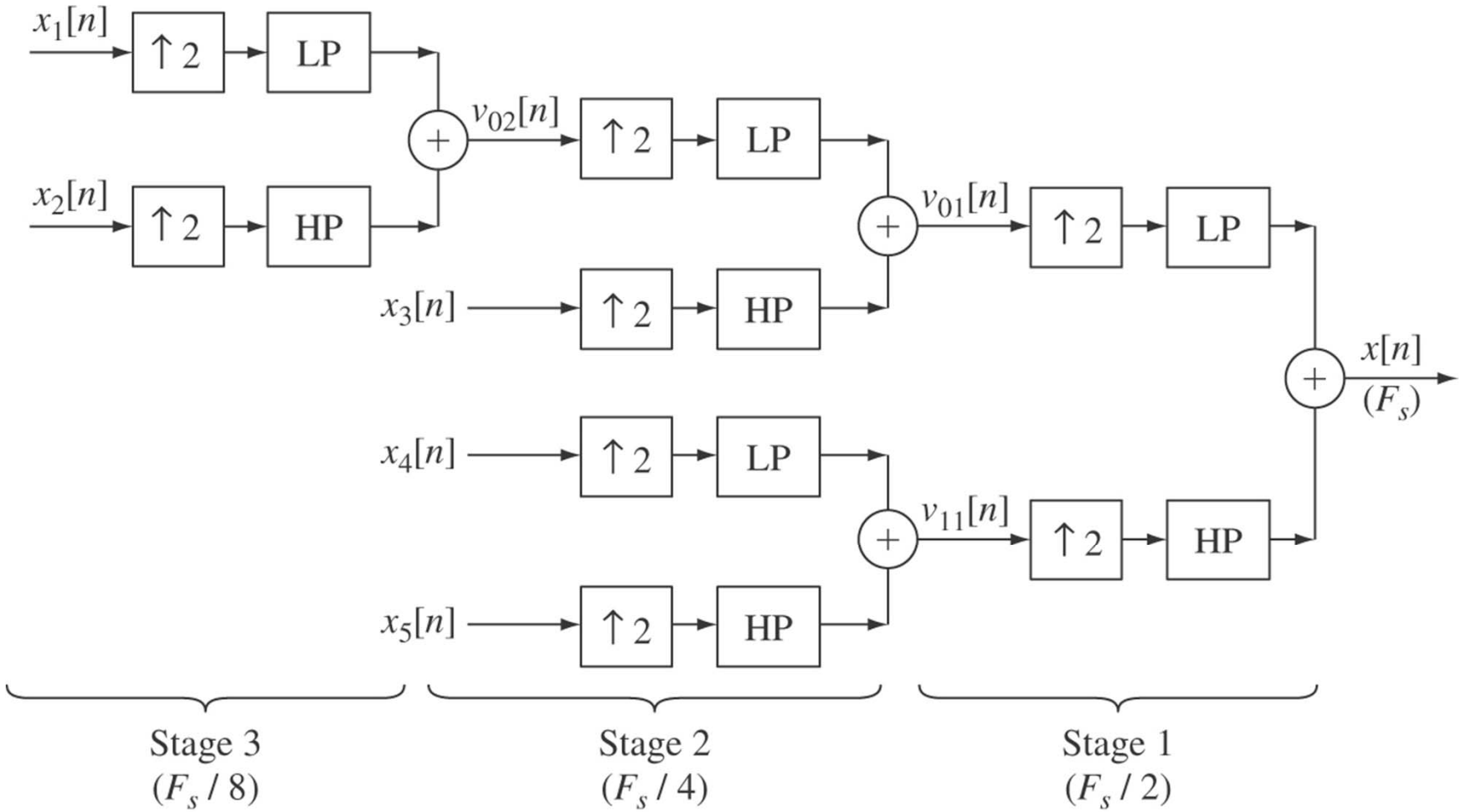

Tree-Structured QMF Filterbank

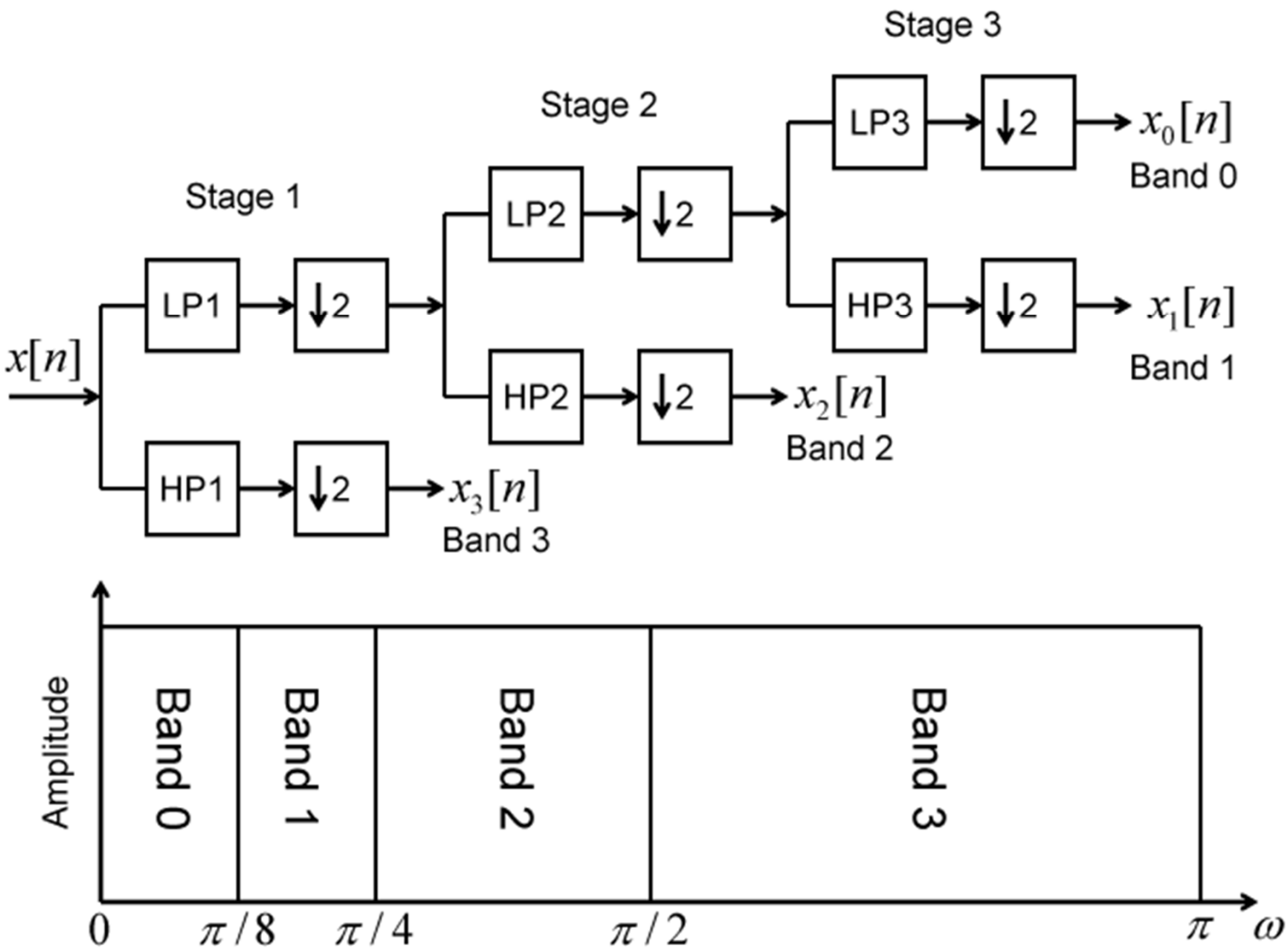

Quantized Channel Signals

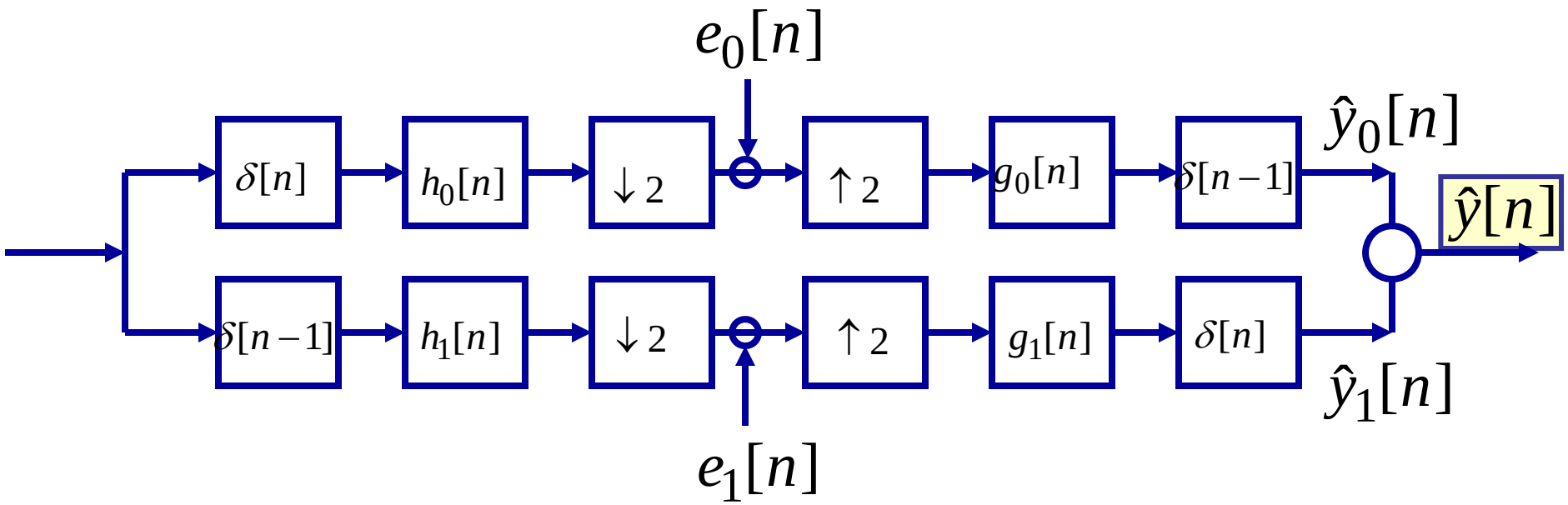

Quantization noise is concentrated in the band that it is generated in.

$$P_{\hat{y}}(e^{j\omega}) = \sigma_{e_0}^2 \left|G_0(e^{j\omega})\right| + \sigma_{e_1}^2 \left|G_1(e^{j\omega})\right|$$

Subband Coding

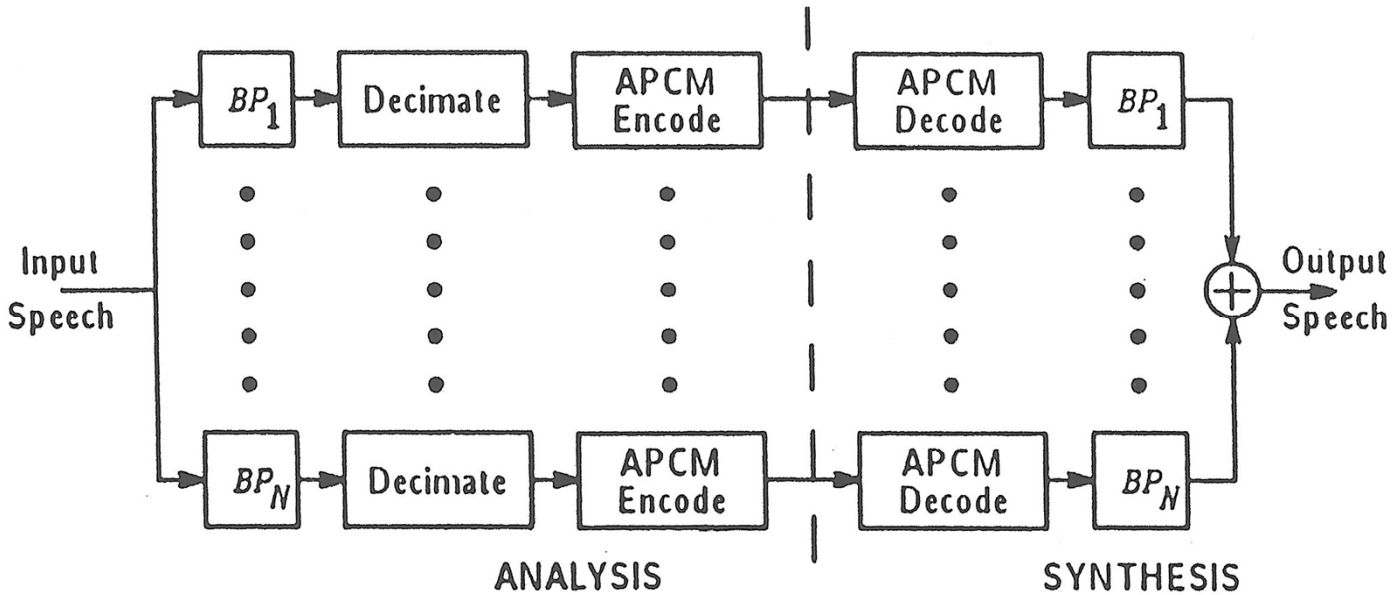

- advantages of subband coding
  - each subband can be encoded according to the perceptual criterion appropriate to that band
  - quantization noise can be confined to the band that produces it
  - low energy bands can be encoded so as to produce less noise
- applicable to coding in the 9.6-16 Kbps range

Practical Example of Subband Coder

Sub-band coder designs for 16, 24 or 32 kb/s

Band	Decimation Factor From 8 kHz	Band Edges (Hz)	Sub-band Sampling Rates (Hz)	(bits/sample) for I (kb/s) = 16	24	32
1	8	0-500	1000	4	5	5
2	8	500-1000	1000	4	5	5
3	4	1000-2000	2000	2	4	4
4	4	2000-3000	2000	2	3	4
5	4	3000-4000	2000	0	0	3

- subband coder using tree-structured filer bank (Crochiere, 1981)

Subband Coder Subjective Quality

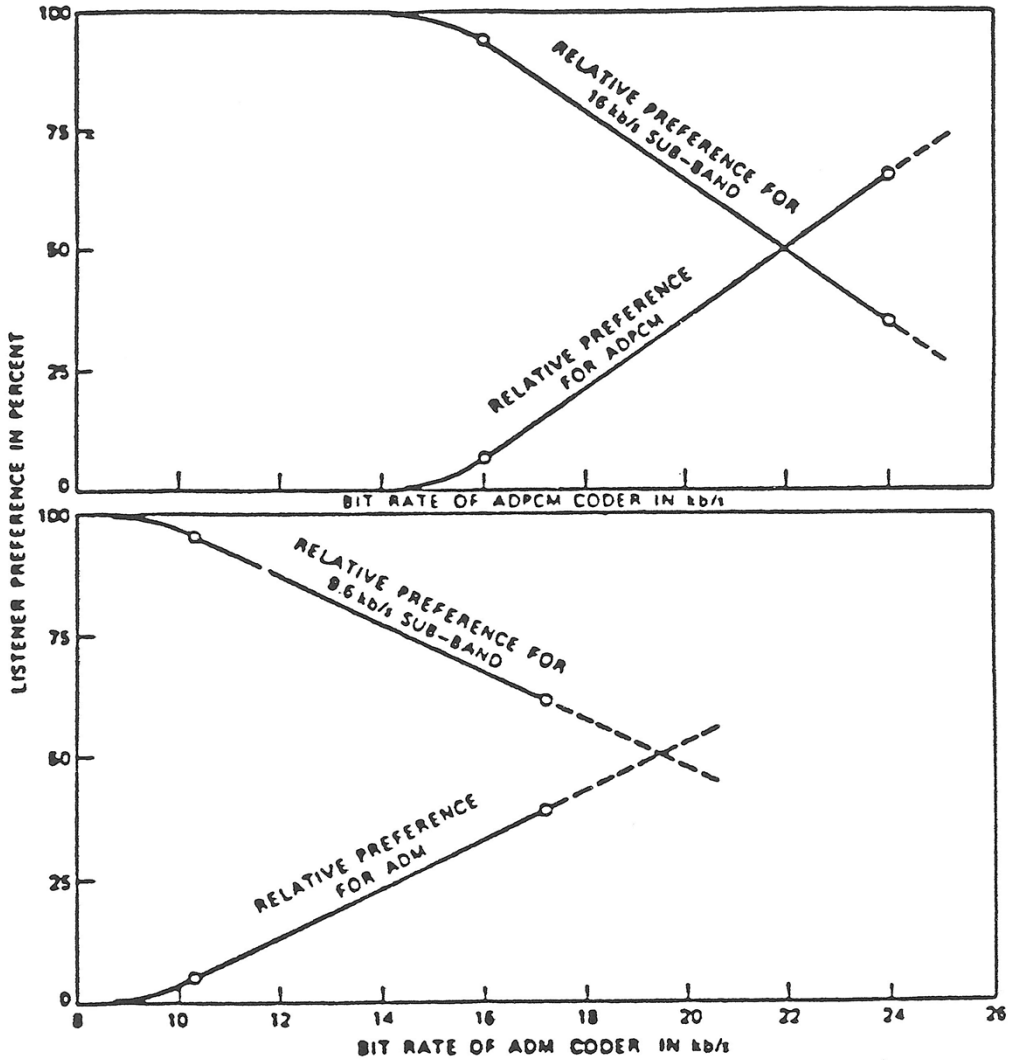

Subband Coder Waveforms

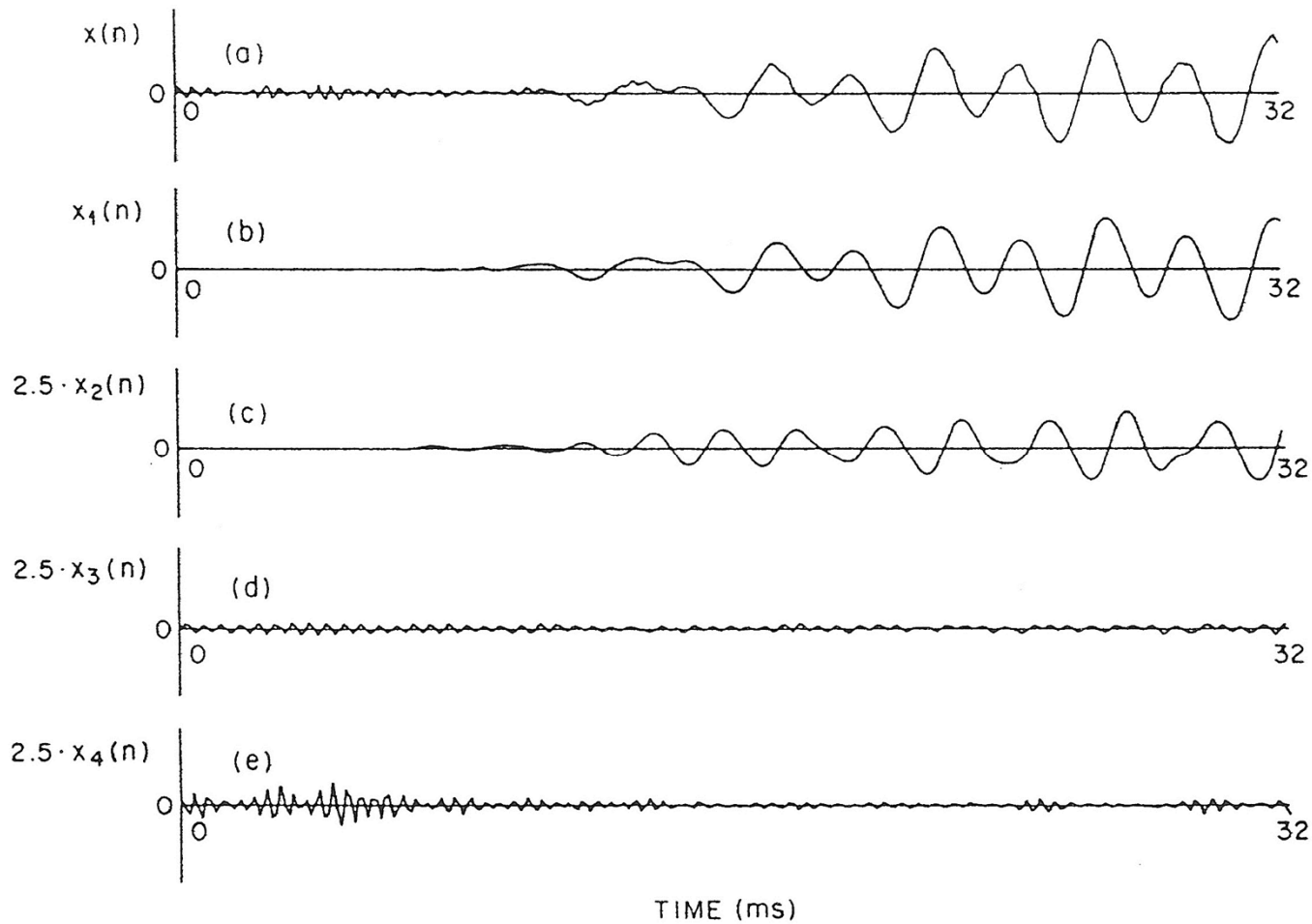

Concept of Time-Frequency Resolution

- When interested in the changing characteristics of the signal, short time Fourier transform or short time spectral analysis is used. $$F(\omega,t)=\int_{-\infty}^{\infty} f(\tau)g(t-\tau)e^{-j\omega\tau}d\tau$$

  $g(t)$ is the window function providing focus in time.

  Temporal spread : $\sigma_t^2=\int_{-\infty}^{\infty}(t-t_c)^2\,|g(t)|^2dt\bullet\left[\int_{-\infty}^{\infty}|g(t)|^2dt\right]^{-1}$

  Frequency spread : $\sigma_\omega^2=\int_{-\infty}^{\infty}(\omega-\omega_c)^2\,|G(\omega)|^2d\omega\bullet\left[\int_{-\infty}^{\infty}|G(\omega)|^2d\omega\right]^{-1}$

  If $g(t)$ is Gaussian, it achieves the minimum time - bandwidth product $\sigma_t\sigma_\omega=0.5$.

  Continuous prolate spheroidal wave function: a bandlimited signal that have the highest energy concentration in a specified time interval.

- To maintain a similar level of uncertainty, the window function should be short to provide time resolution for high frequency components and long to provide frequency resolution for low frequency components.

Wavelet-Based Methods

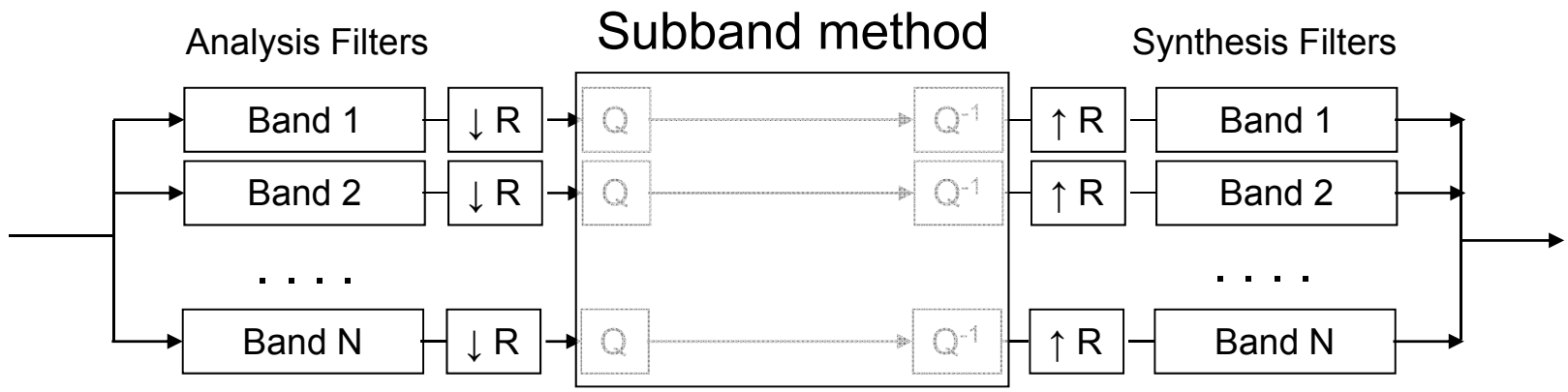

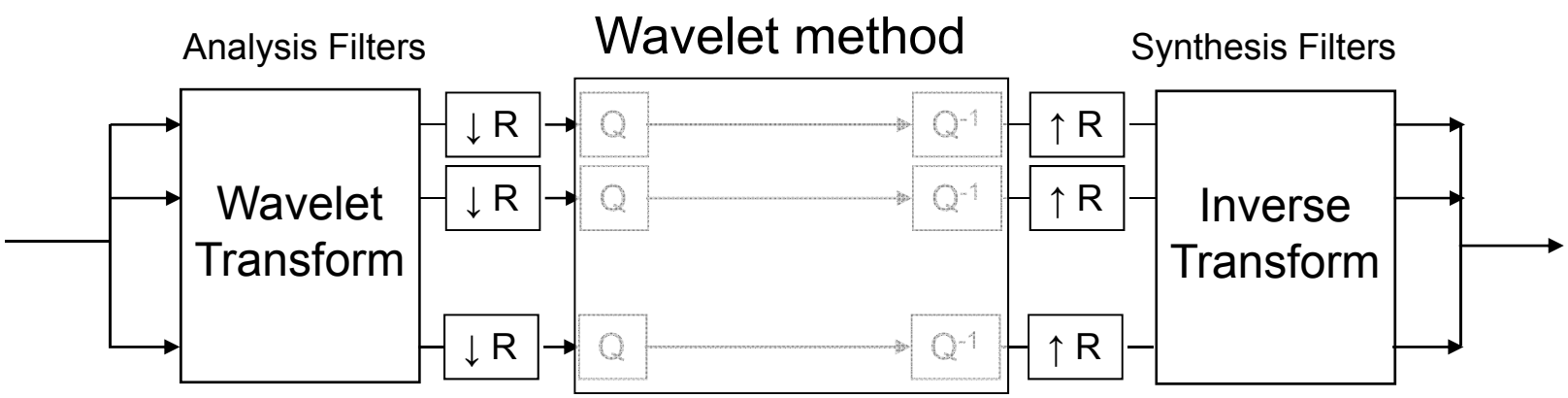

What is in the Wavelet Transform block? What is the difference?

Wavelet Transform

- Built on set of expansion (or basis) functions that are derived from a mother wavelet through scaling and translation:

Let $\psi(t)$ be a mother wavelet : $\psi_{a,\tau}(t) = \frac{1}{\sqrt{a}}\psi\left(\frac{t-\tau}{a}\right)$

Continuous Wavelet Transform:

$$F_w(a,\tau) = \int_{-\infty}^{\infty} f(t)\psi_{a,\tau}^*(t)dt = \frac{1}{\sqrt{a}}\int_{-\infty}^{\infty} f(t)\psi^*\left(\frac{t-\tau}{a}\right)dt = \frac{1}{\sqrt{a}} f(\tau) * \psi^*\left(-\frac{\tau}{a}\right)$$

$$F_w(a,\tau) = \frac{1}{\sqrt{a}}\int_{-\infty}^{\infty} f(at)\psi^*\left(t-\frac{\tau}{a}\right)dt$$ stretch or compress the signal for analysis

$|F_w(a,\tau)|^2 =$ scalogram; $|F(\omega,\tau)|^2 =$ spectrogram

Let $\Psi(\omega) = \mathrm{F}\{\psi(t)\}$ and $\Psi_{a,\tau}(\omega) = \mathrm{F}\{\psi_{a,\tau}(t)\}$

Inverse transform: $f(t) = \frac{1}{C_\psi}\int_{-\infty}^{\infty}\int_{-\infty}^{\infty} F_w(a,\tau)\psi_{a,\tau}(t)\frac{da\,d\tau}{a^2}$

Admissibility condition: $C_\psi = \int_0^{\infty} \frac{|\Psi_0(\omega)|^2}{\omega} d\omega < \infty$ $\Longrightarrow$ $\Psi(0) = 0$

Wavelet and Fourier Transform

$\Psi(\omega) = \mathrm{F}\{\psi(t)\}$ and $\Psi_{a,\tau}(\omega) = \mathrm{F}\{\psi_{a,\tau}(t)\}$ $\qquad F(\omega) = \mathrm{F}\{f(t)\}$

$$\psi_{a,\tau}(t) = \frac{1}{\sqrt{a}}\psi\left(\frac{t-\tau}{a}\right) \quad \Leftrightarrow \quad \Psi_{a,\tau}(\omega) = \sqrt{a}\Psi(a\omega)e^{-j\tau\omega}$$

$$F_w(a,\tau) = \frac{1}{\sqrt{a}}\int_{-\infty}^{\infty} f(t)\psi^*\left(\frac{t-\tau}{a}\right)dt = \frac{1}{\sqrt{a}} f(\tau) * \psi^*\left(-\frac{\tau}{a}\right)$$

$$W(a,\omega) = \mathrm{F}(F_w(a,\tau)) = \mathrm{F}\left\{\frac{1}{\sqrt{a}} f(\tau) * \psi^*\left(-\frac{\tau}{a}\right)\right\} = \sqrt{a}F(\omega)\Psi(a\omega)$$

$W(a,\omega)$ is the frequency domain representation of the wavelet transform.

Wavelet and Its Spectrum

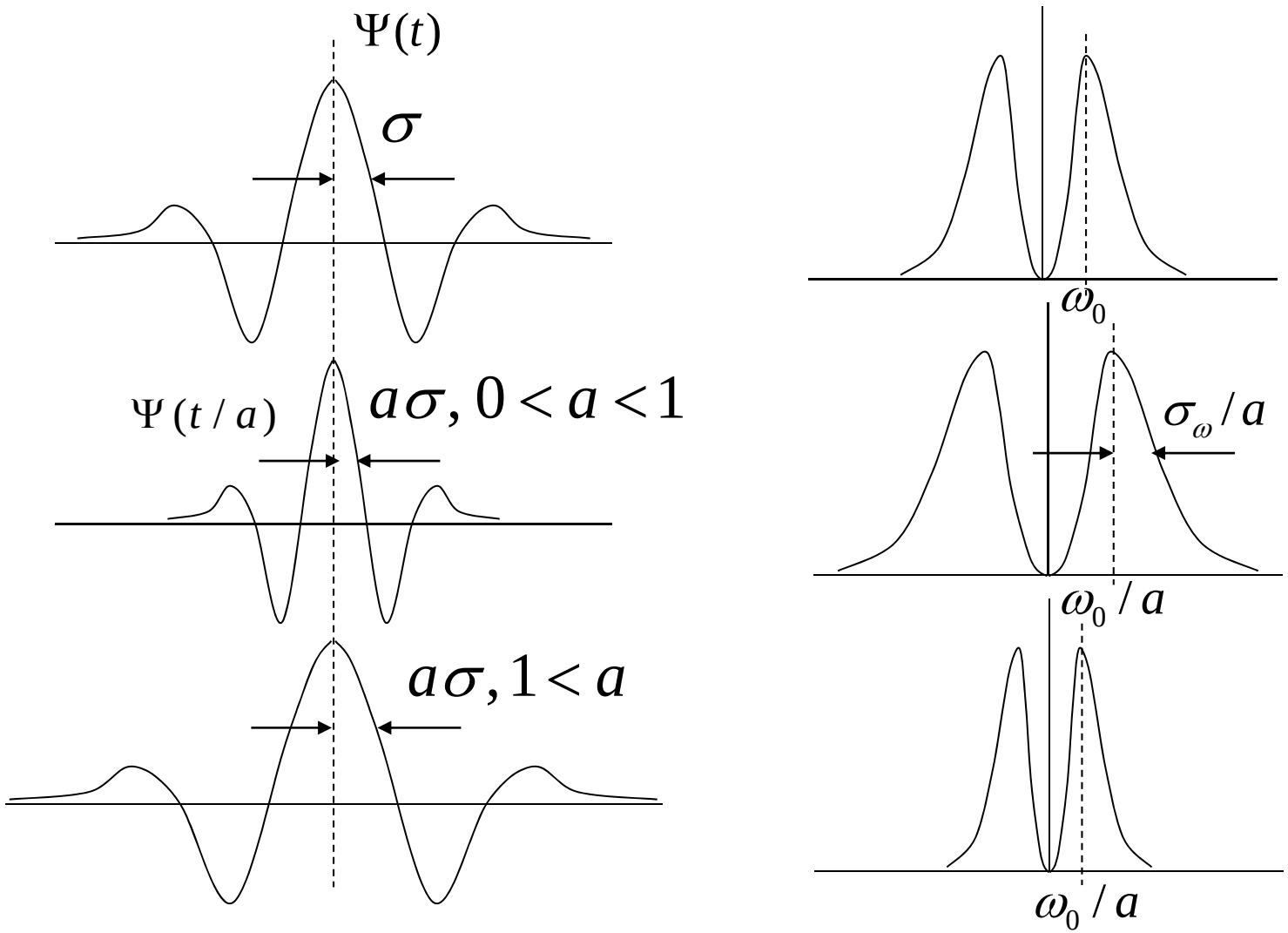

Scaling and Translation

- For discrete wavelet transform,

$a = a_0^{-m}$ and $\tau = n\tau_0 a_0^{-m}$ m, n are integers

$$\psi_{a,\tau}(t) = \psi_{m,n}(t) = a_0^{m/2}\psi(a_0^m t - n\tau_0) \quad m, n \in Z$$

If $a_0 = 2$ and $\tau_0 = 1$, ← dyadic or octave sampling

$$\psi_{m,n}(t) = 2^{m/2}\psi(2^m t - n) \quad m, n \in Z$$

If the set $\{\psi_{m,n}(t)\}$ is complete, it is called affine wavelets.

Orthogonality condition: $\int_{-\infty}^{\infty} \psi_{m,n}(t)\psi_{p,q}^*(t)dt = \delta(m-p)\delta(n-q)$

$$F_w(a,\tau) = w_{m,n} = a_0^{m/2}\int_{-\infty}^{\infty} f(t)\psi(a_0^m t - n\tau_0)dt$$

and $$f(t) = \sum_m \sum_n w_{m,n}\psi_{m,n}(t)$$

The orthogonality condition may not be easy to satisfy for a general set of "wavelets;" but it is still possible to invert discrete wavelet transform, sometimes.

STFT and CWT

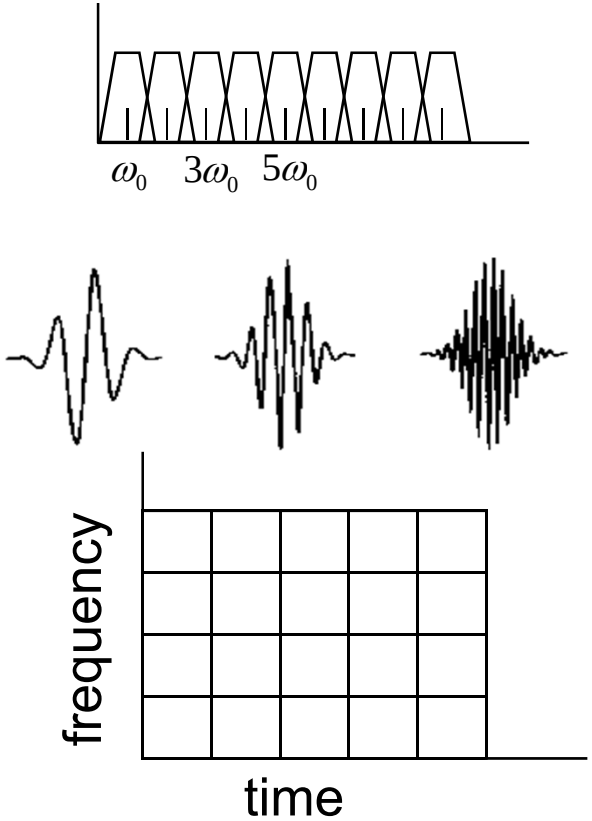

Constant bandwidth

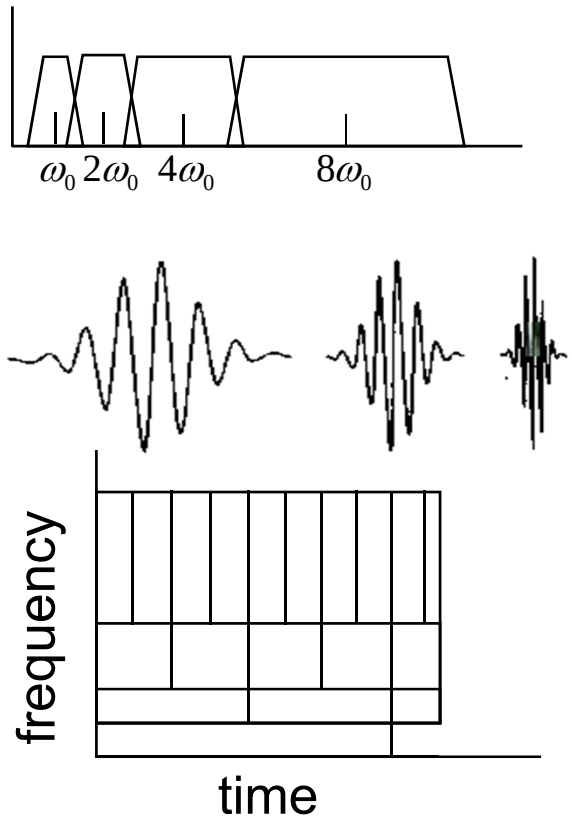

Constant-Q bandwidth

Discrete Wavelet Transforms

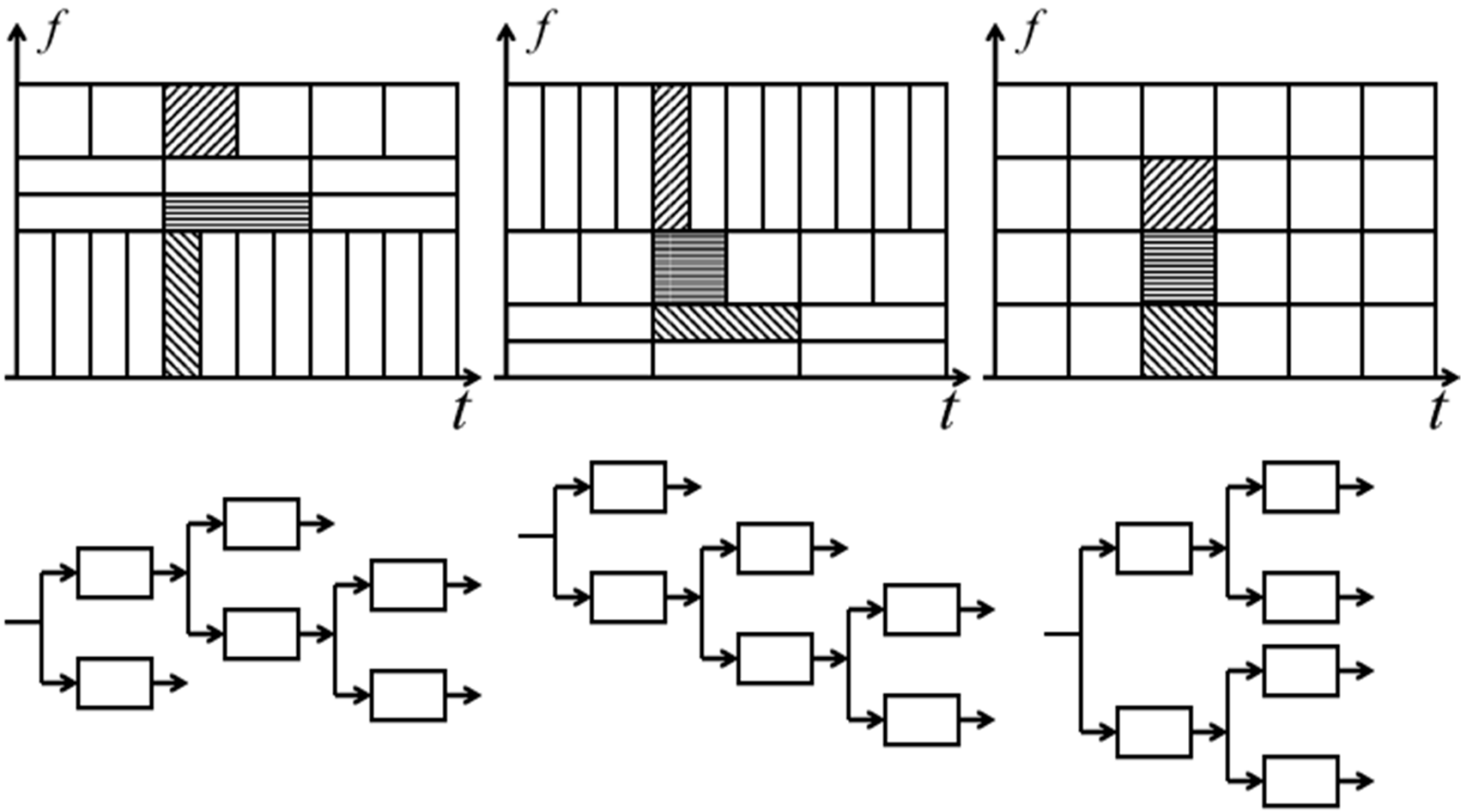

Other Simpler Transforms or Filter Banks

- Short-time analysis can also be viewed as data transformation, executed in a block-by-block manner, using for example:
  - Discrete Cosine Transform
  - Discrete Sine Transform
  - Filter bank based on DFT/FFT
- General remarks:
  - Discussion so far aims at a filter bank framework that allows perfect reconstruction (i.e., no loss of information in the original signal if desired);
  - But many speech processing systems do not require perfect reconstruction; rather, one may want to focus on “extraction” of key parameters or features from the speech signal;
  - Therefore, other analysis methods (e.g., transformations that do not have inverse) may still apply.

DFT and DCT

N-point DFT (Discrete Fourier Transform)

$$X(k) = \sum_{n=0}^{N-1} x(n) e^{-j(2\pi/N)kn}$$

$$\tilde{x}(n) = \frac{1}{N} \sum_{k=0}^{N-1} X(e^{j(2\pi/N)k}) e^{j(2\pi/N)kn} = \sum_{r=-\infty}^{\infty} x(n+rN)$$

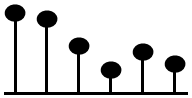

implies →

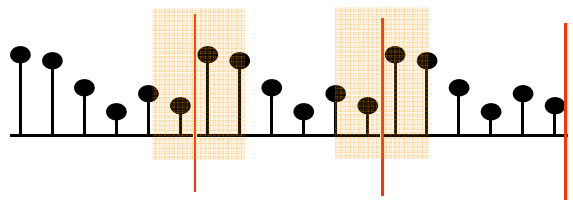

Possible excessive discontinuity at edges

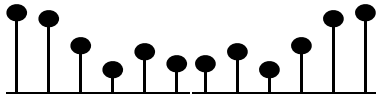

2N-point symmetric

2N-point DFT

N-point DCT

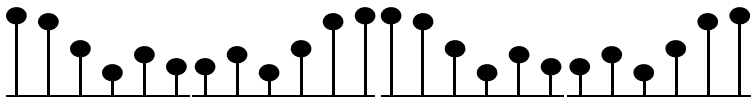

Relates to real part of 2N-point DFT when the signal is symmetric

$$X(k) = \sum_{n=0}^{2N-1} x(n) e^{-j(2\pi/N)kn} \quad \text{and} \quad x(n) = x(2N-n) \rightarrow X(k) = 2\sum_{n=0}^{N-1} x(n) \cos(2\pi kn/N)$$

But, be careful about the point of symmetry!!

Discrete Cosine Transforms

Extensively used in audio, image and video

DCT-I $$c_k = \frac{1}{2}\left(x(0) + (-1)^k x(N-1)\right) + \sum_{n=1}^{N-2} x(n)\cos\left(\frac{kn\pi}{N-1}\right)$$

DCT-II $$c_k = \sum_{n=0}^{N-1} x(n)\cos\left[\frac{k\pi}{N}\left(n+\frac{1}{2}\right)\right]$$

Most common DCT; equivalent (up to a scale factor of 2) to a DFT of 4*N* real inputs of even symmetry with the even-indexed elements set to zero; i.e., an artificial shift of half sample in the original sampling setup.

DCT-III (IDCT) $$c_k = \frac{1}{2}x(0) + \sum_{n=1}^{N-1} x(n)\cos\left[\frac{n\pi}{N}\left(k+\frac{1}{2}\right)\right]$$

even around x_0 and odd around x_N ; c_k is even around $k = -\frac{1}{2}$ and odd around $k = N - \frac{1}{2}$.

Still more variants.

Discrete Sine Transform

$$\mathbf{S} = \left[s_{ij} \right]_{i,j=0}^{N-1}$$ 2-D case; eliminate one dimension for 1-D

$$s_{ij} = \sqrt{\frac{2}{N+1}} \sin \frac{(j+1)(i+1)\pi}{N+1}, \quad i, j = 0, 1, 2, \cdots, N-1$$

Relates to imaginary part of ~2N-point DFT

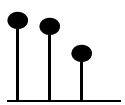

3-point sequence

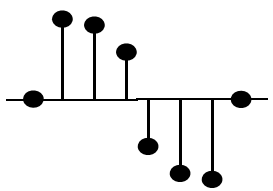

8-point anti-symmetric sequence

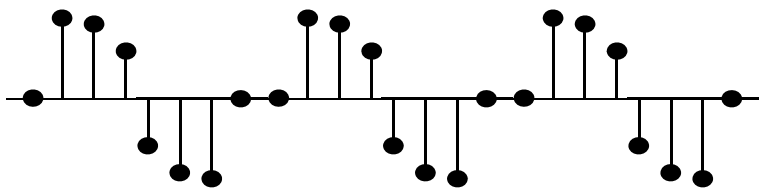

Sequence corresponds To 8-point DFT

Discrete (Time) Fourier Transform - Revisited

- The DTFT (discrete time Fourier transform) of an N-point sequence is

$$X(e^{j\omega}) = \sum_{n=0}^{N-1} x(n)e^{-j\omega n} \quad \text{Frequency } \omega \text{ is continuous.}$$

- Sample the DTFT at

$$\omega_k = (2\pi/N)k,\ k = 0,1,\ldots,N-1.$$

- The result is the DFT (Discrete Fourier Transform)

$$X(e^{j\omega})\big|_{\omega=2\pi k/N} = \sum_{n=0}^{N-1} x(n)e^{-j(2\pi/N)kn} = X(k)$$

- If we compute the inverse DFT, we obtain

$$\tilde{x}(n) = \frac{1}{N}\sum_{k=0}^{N-1} X(e^{j(2\pi/N)k})e^{j(2\pi/N)kn} = \sum_{r=-\infty}^{\infty} x(n+rN)$$

DFT for Power Spectral Density Estimation

$$X(e^{j\omega}) = \sum_{n=0}^{N-1} x(n)e^{-j\omega n}$$

$$S(\omega) = \left| X(e^{j\omega}) \right|^2$$

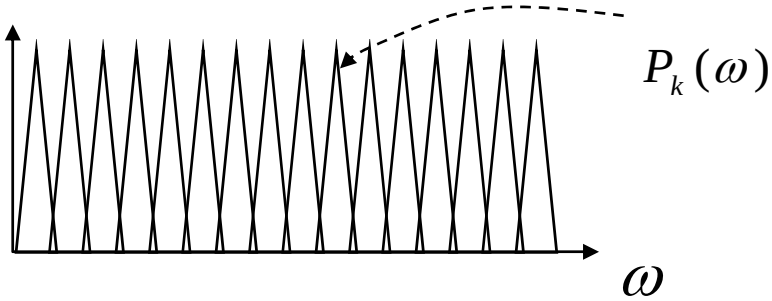

: k^{th} channel processing (weighting) function

$$S_k(\omega) = S(\omega)P_k(\omega), \quad \forall k$$

Examples of non-uniform filter banks

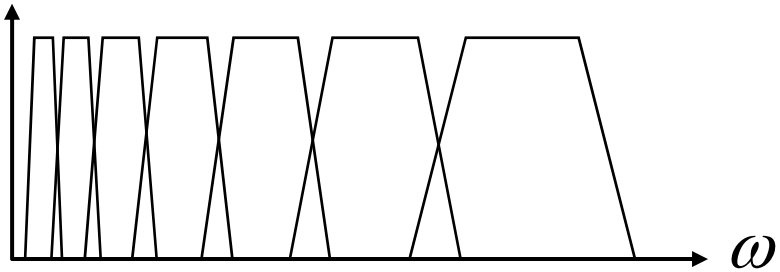

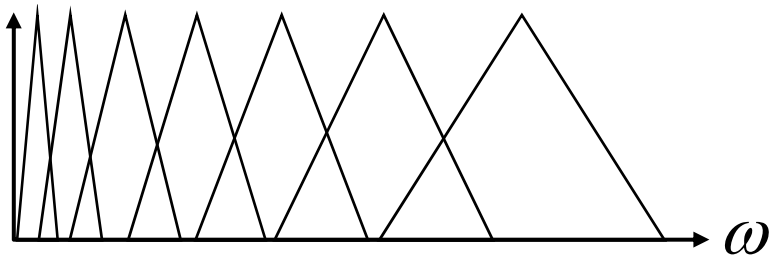

Perfect reconstruction may not be a requirement.