ECE145a / 218a
Resistive Feedback Amplifiers

Mark Rodwell

University of California, Santa Barbara

rodwell@ece.ucsb.edu 805-893-3244, 805-893-3262 fax

Resistive Feedback For Line Termination

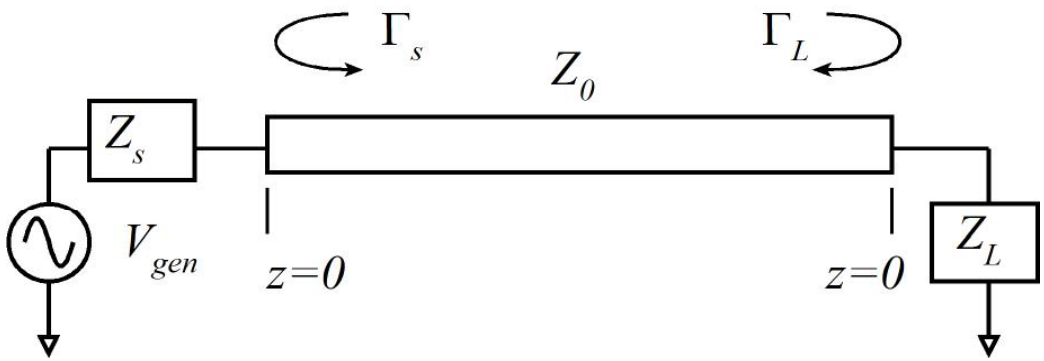

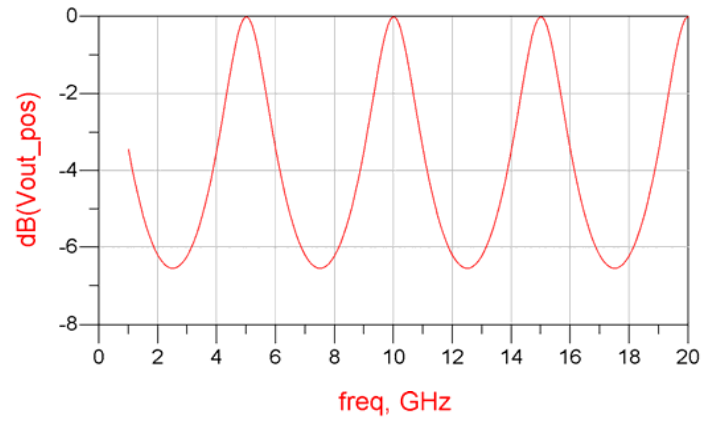

Recall : there are 2 different reasons for impedance - matching

1) Maximum power transfer

2) Avoiding gain ripple from standing waves on lines.

In resistive feedback amplifiers, feedback provides $Z_{in} = Z_{out} = Z_o$ in order to eliminate line reflections.

These are * not * designed for maximum power transfer, hence we do not obtain the transistor maximum gain.

World's Simplest Amplifier

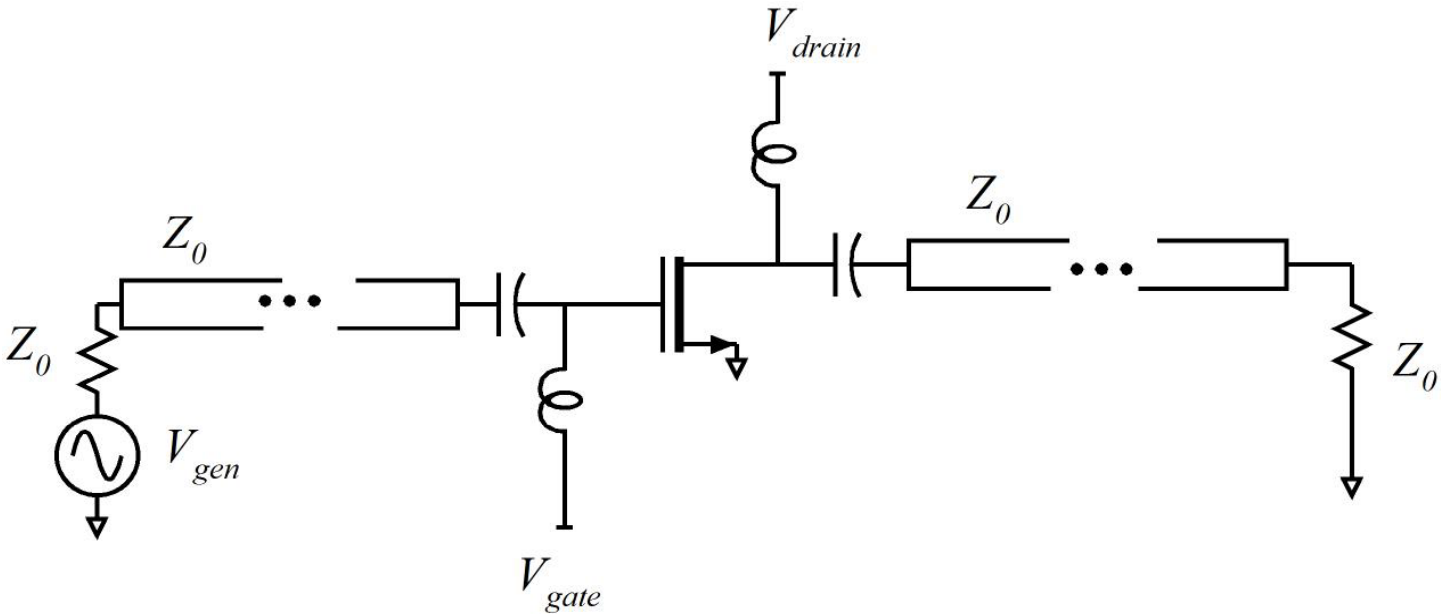

Amplifier consists of transistor and bias tees, connected to input and output transmission-lines.

Transmission-lines are external to amplifier; reference planes are at line ends.

Analysis

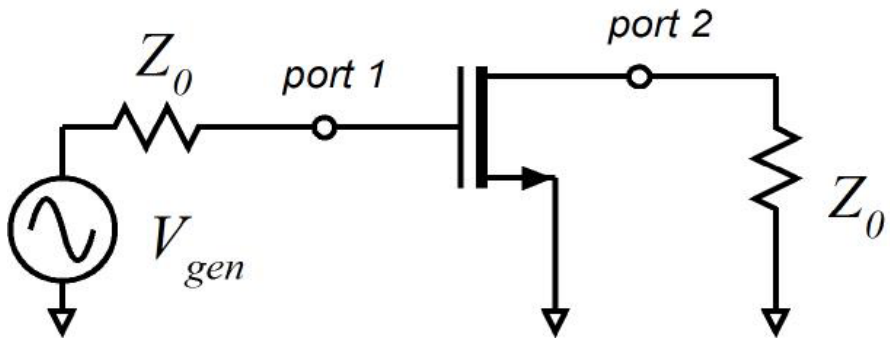

To find S - parameters,
we compute gains and impedances
with $Z_{gen} = Z_{load} = Z_0$.

Take the DC bias elements as implicit.

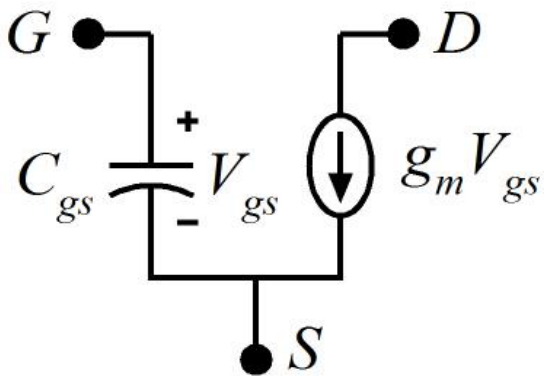

Use - for now - a highly simplified
device model.

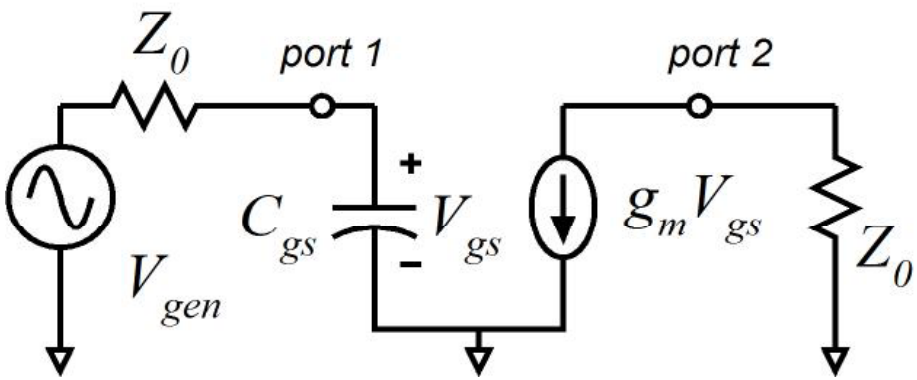

Circuit to analyze

Analysis

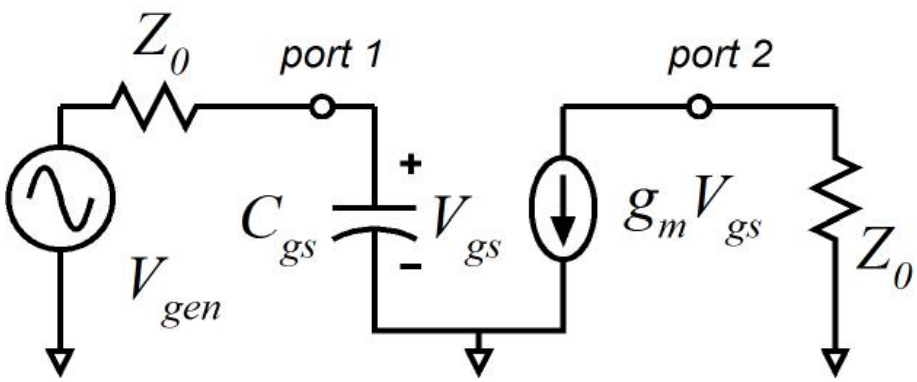

By inspection:

$$S_{21} = 2\frac{V_{out}}{V_{gen}}\bigg|_{Z_{gen}=Z_L=Z_0} = \frac{-2g_m Z_0}{1+j\omega Z_0 C_{gs}}$$

$$Z_{in} = 1/j\omega C_{gs} \rightarrow S_{11} = \frac{Z_{in}/Z_o - 1}{Z_{in}/Z_o + 1}$$

$$R_{out} = \infty \rightarrow S_{22} = \frac{Z_{out}/Z_o - 1}{Z_{out}/Z_o + 1}$$

What is wrong with this amplifier?

Though gain is lower than G_{max} (no matching), it may meet our needs!

More serious problem: large S_{11}, S_{22} $\rightarrow$ standing waves $\rightarrow$ gain ripple.

Standing Waves

Reflections at both line ends will cause gain/phase varations of the form:

$$\frac{1}{1-e^{-2j\beta l}\Gamma_S\Gamma_L},$$

hence gain will vary with both cable length and with frequency.

We need to fix this.

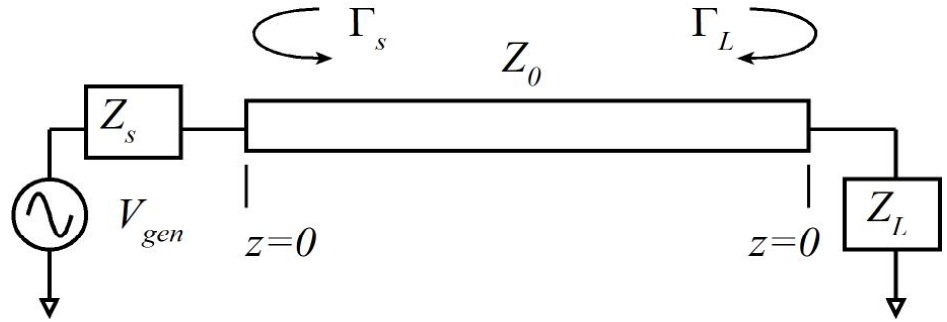

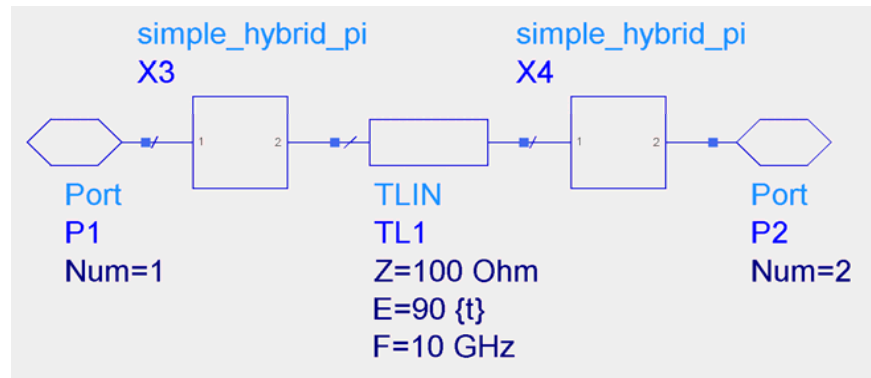

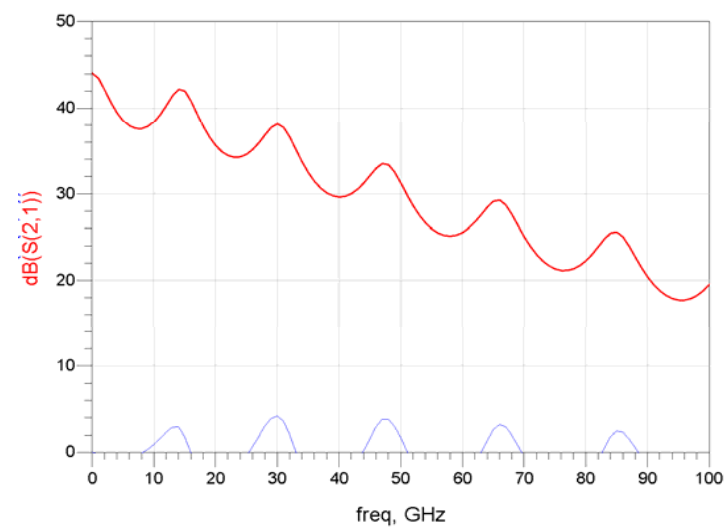

Eliminating Standing Waves

So, while we can directly match two stages directly, thus...

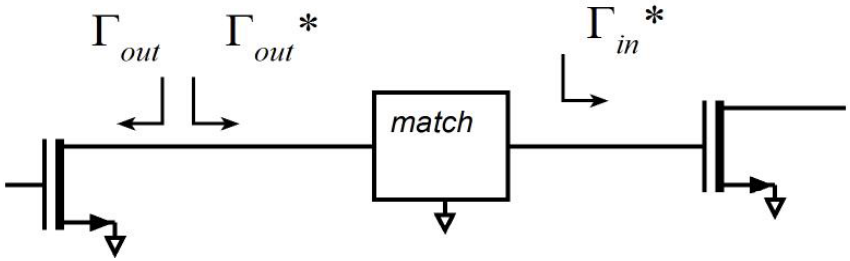

...this is only acceptable if line lengths are short and the connection permanent.

If lines are long, or the components modular, so that connections can be changed, we must match each device to Z_0.

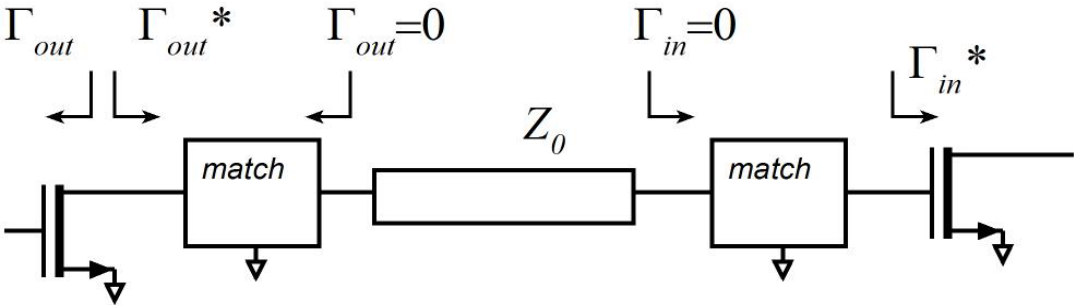

Types of Impedance Matches

Reactive Impedance Matching (lossless):

Reflection coefficients $\rightarrow 0$.

No power reflected.

No signal power absorbed in matching networks.

$\rightarrow$ Circuit Gain = device maximum available gain (maybe)

Resistive Impedance Matching (lossy):

Reflection coefficients $\rightarrow 0$.

No power reflected.

Signal power absorbed in matching networks.

$\rightarrow$ Circuit Gain less than device maximum available gain

World's Second Simplest Amplifier

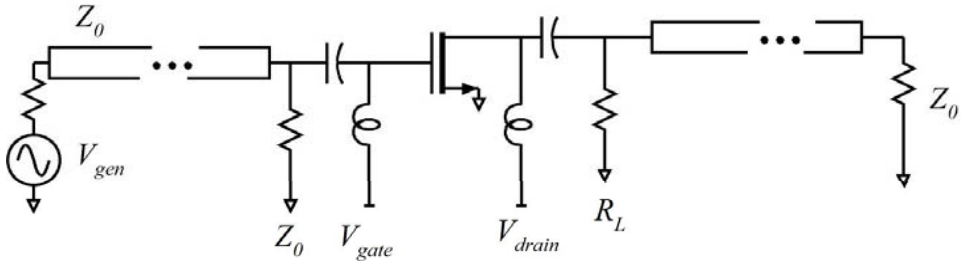

In the absence of transistor parasitics, lines are now terminated in Z_0.

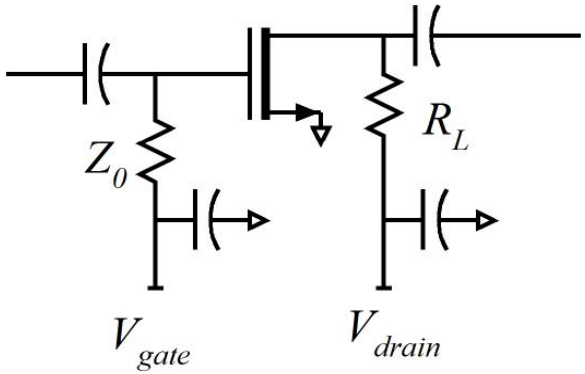

Reflections are now (nearly) eliminated.

Power gain is wasted :
signal dissipation in terminations

Analysis

Circuit (bias implicit)

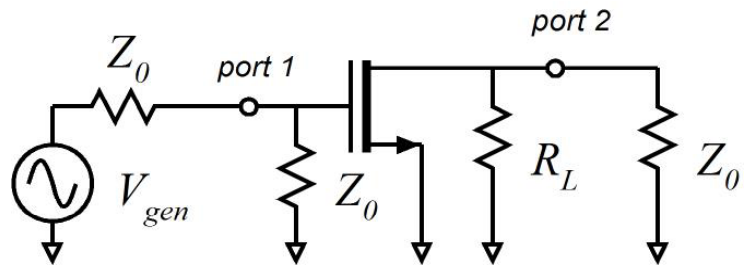

(over) - simplified device model

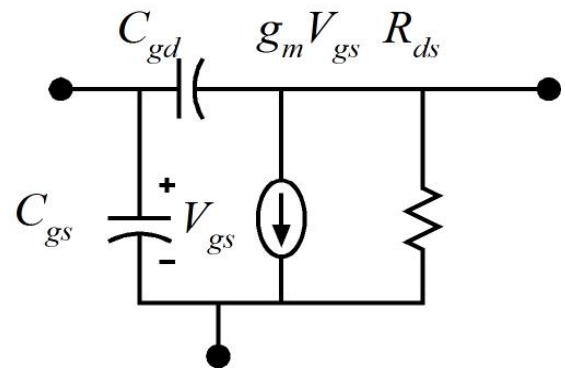

Ciruit Model

We will pick $R_{ds} \| R_L = Z_0$

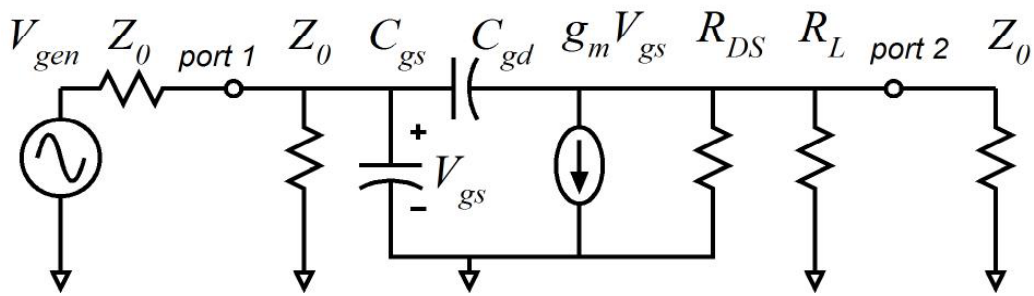

Analysis

As always:

$$S_{21} = 2\frac{V_{out}}{V_{gen}}\bigg|_{Z_{gen}=Z_L=Z_0}$$

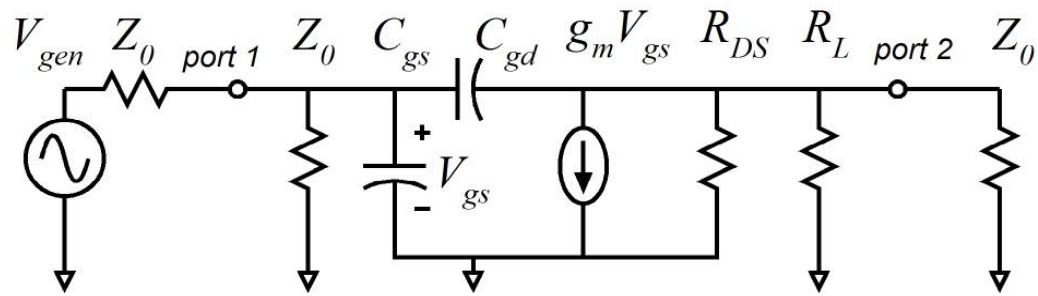

By nodal analysis or MOTC:

$$S_{21} = -(g_m Z_0/2)\frac{1+b_1 s}{1+a_1 s + a_2 s^2}$$

where $a_1 = C_{gs}(Z_0/2) + C_{gd}\left[(Z_0/2)(1+g_m Z_0/2) + (Z_0/2)\right]$

the terms a_2 and b_1 are relevant only at very high frequencies.

The Miller effect term should be obvious.

Analysis

$$S_{21} \cong -(g_m Z_0/2)\frac{1}{1+j\omega a_1} \text{ where } a_1 = C_{gs}(Z_0/2) + C_{gd}\left[(Z_0/2)(1+g_m Z_0/2)+(Z_0/2)\right]$$

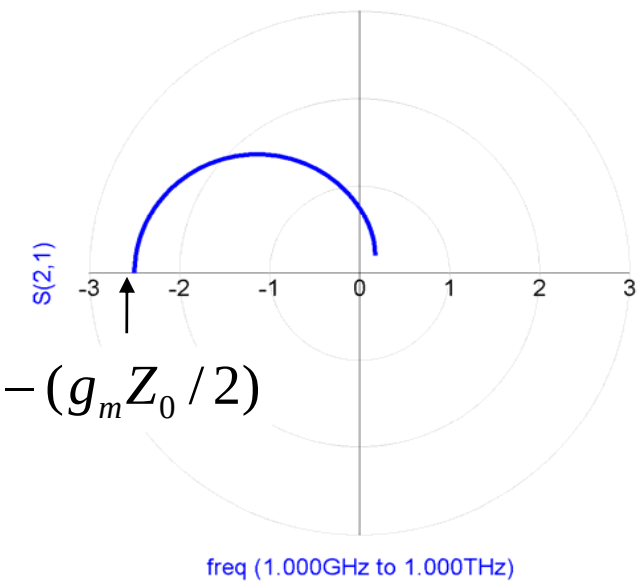

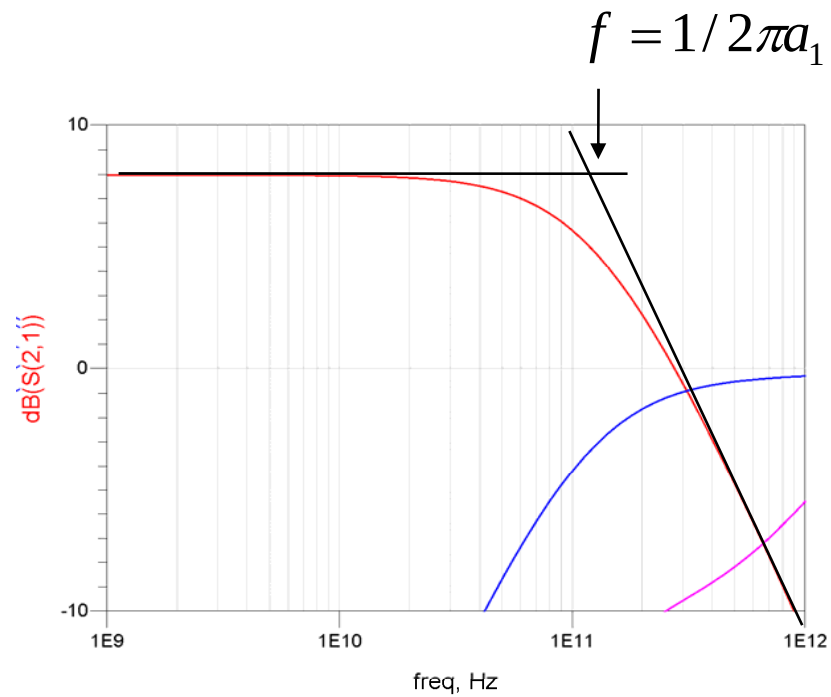

Note the standard Bode Plot behavior with - 20 dB/decade slope and 3 dB corner.

Note that the S_{21} trajectory is a semicircle in the complex plane.

Input Impedance

Using the Miller Approximation :

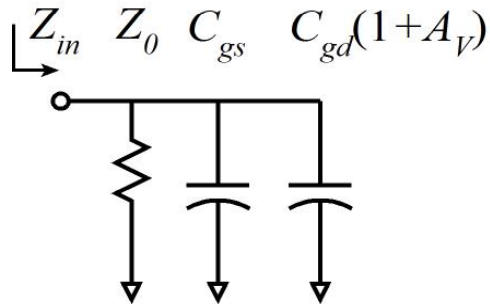

Note that this (almost) follows a constant - G circle on the Smith chart.

Note the single - pole behavior of S_{11}.

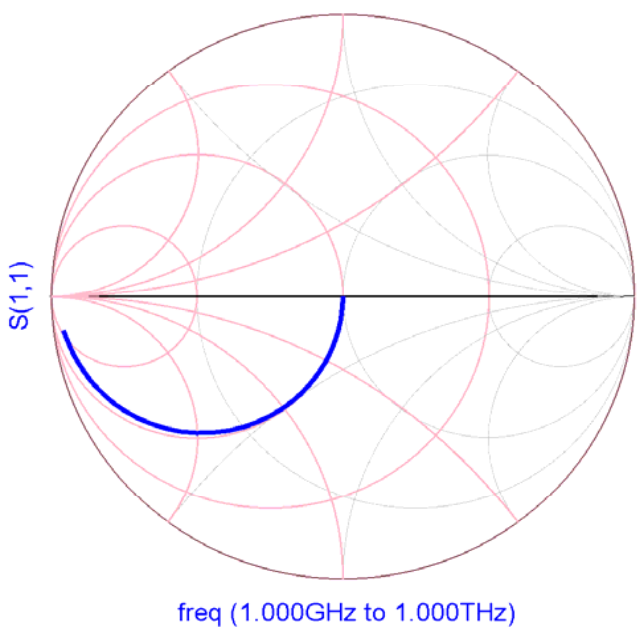

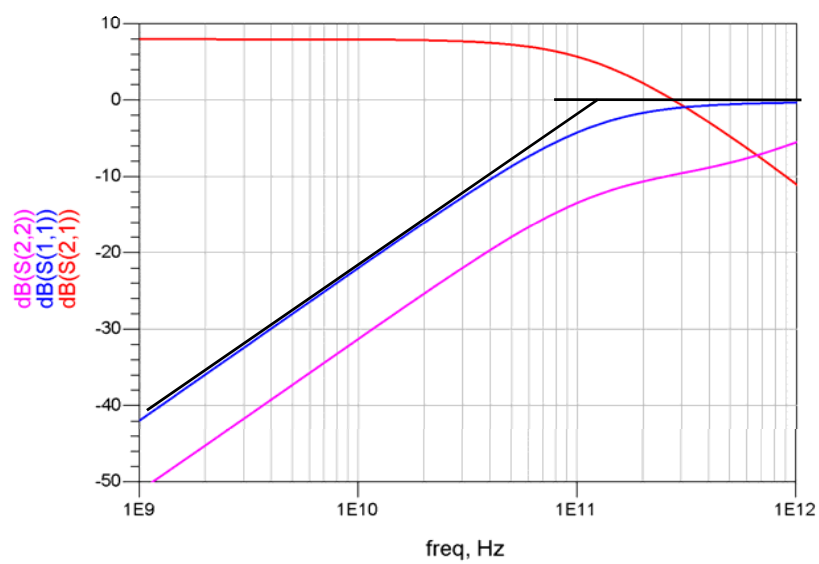

Gain-Bandwidth Product

$$\| S_{21,baseband} \| \cong (g_m Z_0 / 2) \text{ and } 1/2\pi f_{high} \cong C_{gs}(Z_0 / 2) \text{ if } C_{gd} \to 0$$

$$\text{So, gain - BW product} = \| S_{21,baseband} \| f_{high} = g_m / 2\pi C_{gs} = f_\tau$$

A rough calculation only;

poorer bandwidth when other device parasitics are considered.

Simple Resistive-Terminated Amplifier: General Form

This stage generalizes
to use with any g_m block.

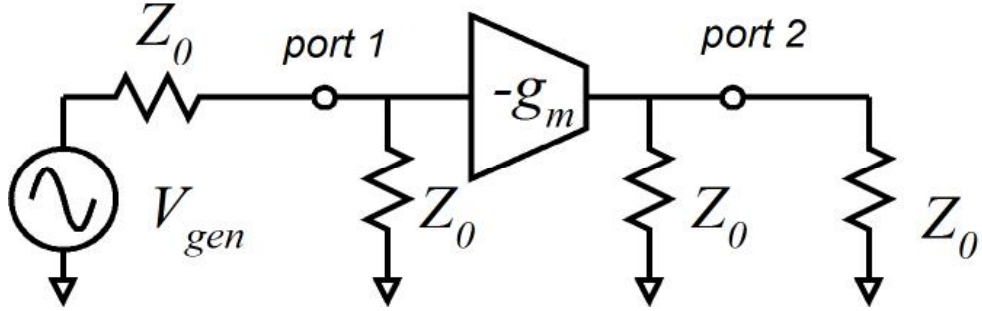

Recall : extrinsic tranconductance for
a transistor with emitter/source degeneration
R_x is

$$g_{m,extrinsic} = (1/g_{m,transistor} + R_x)^{-1}$$

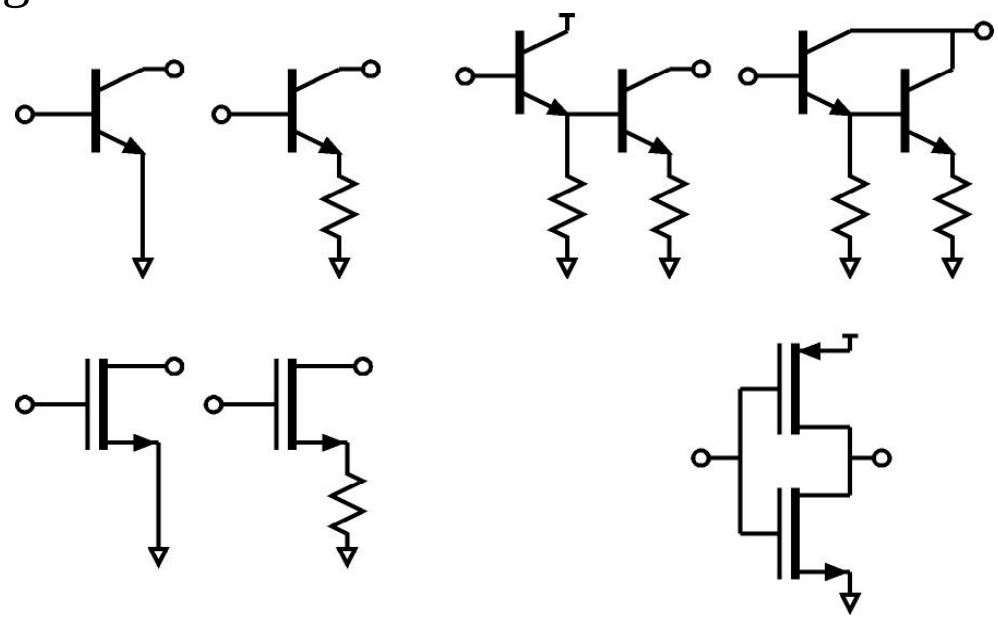

Broadband Feedback Amplifier

Resistive Feedback used
to provide input and output
impedances of Z_0

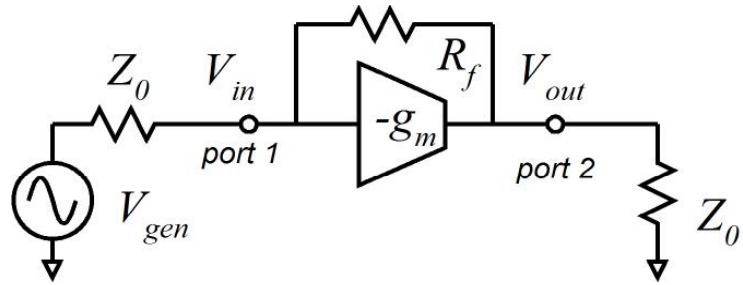

We want : $V_{out}/V_{in} = -A_v$ and $Z_{in} = Z_0$

We must find g_m, R_f necessary to obtain this.

If we are lucky, we will also get $Z_{out} = Z_0$.

Finding Rf:

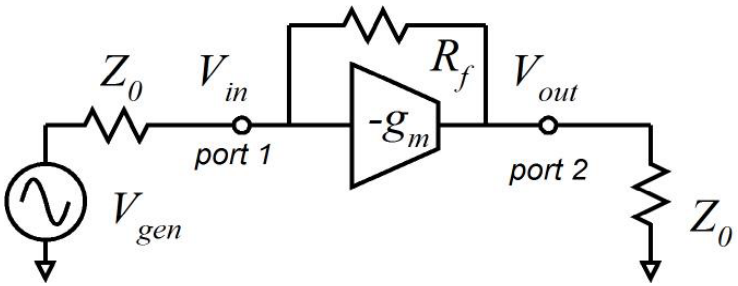

Input current : $I_{in} = V_{in} / Z_{in} = V_{in} / Z_0$

Current in R_f :

$$I_{R_f} = (V_{in} - V_{out}) / R_f = (V_{in} + A_v V_{in}) / R_f = V_{in}(1 + A_v) / R_f$$

But : $I_{R_f} = I_{in}$

$$V_{in} / Z_0 = V_{in}(1 + A_v) / R_f$$

$$\rightarrow R_f = Z_0(1 + A_v)$$

Finding g_m:

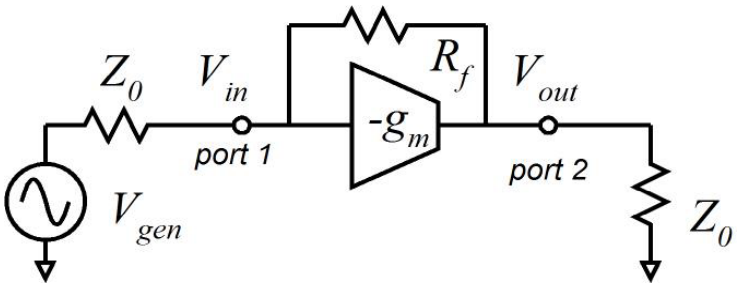

Current in R_f :

$$I_{R_f} = V_{in} / R_{in} = V_{in} / Z_0$$

Current in load R_f :

$$I_{out} = V_{out} / Z_0 = -V_{in} A_v / Z_o$$

g_m block output current :

$$I_{g_m} = -g_m V_{in} = I_{out} - I_{R_f} = -V_{in} A_v / Z_o - V_{in} / Z_0 = -V_{in}(1 + A_v) / Z_o$$

$$\rightarrow g_m = (1 + A_v) / Z_o$$

Finding Zout (harder):

$$V_{in} = V_{test} Z_0 / (Z_0 + R_f)$$

$$I_{test} = \text{current in } R_f + \text{current in } g_m$$

$$= V_{in} / Z_0 - g_m V_{in}$$

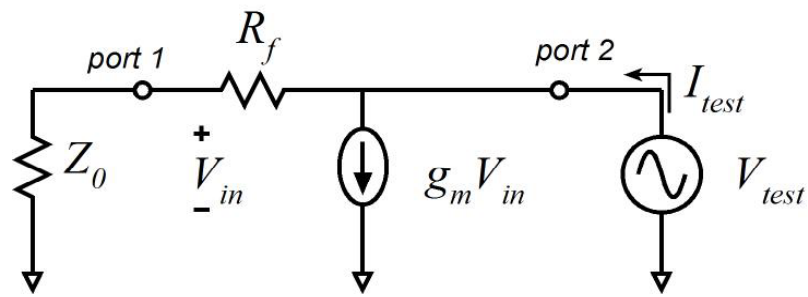

$$G_{out} = \frac{1}{R_{out}} = \frac{I_{test}}{V_{test}} = \frac{Z_0}{Z_0 + R_f}\left(\frac{1}{Z_0} - g_m\right)$$

$$G_{out} = \frac{Z_0}{Z_0 + Z_0(1 + A_v)}\left(\frac{1}{Z_0} + \frac{1 + A_v}{Z_0}\right)$$

$$G_{out} = \frac{1}{2 + A_v} \cdot \frac{1}{Z_0}(2 + A_v)$$

$$G_{out} = \frac{1}{Z_0} !!!!$$

Output is impedance - matched

Broadband Feedback Amplifier: Summary

We want : $V_{out}/V_{in} = -A_v$, $Z_{in} = Z_0 = Z_{out}$

This is obtained by setting :

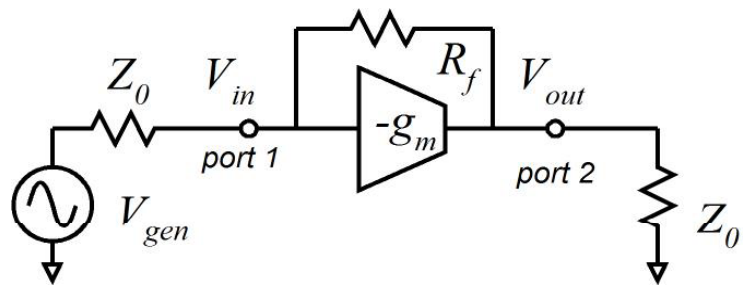

$$g_m = \frac{1+A_v}{Z_0} \text{ and}$$

$$R_f = (1+A_v)Z_0$$

Though, note that $Z_{in} = Z_0$ only if $Z_L = Z_0$

and $Z_{out} = Z_0$ only if $Z_{gen} = Z_0$

Broadband Feedback Amplifier: Why do it ?

Why do this...

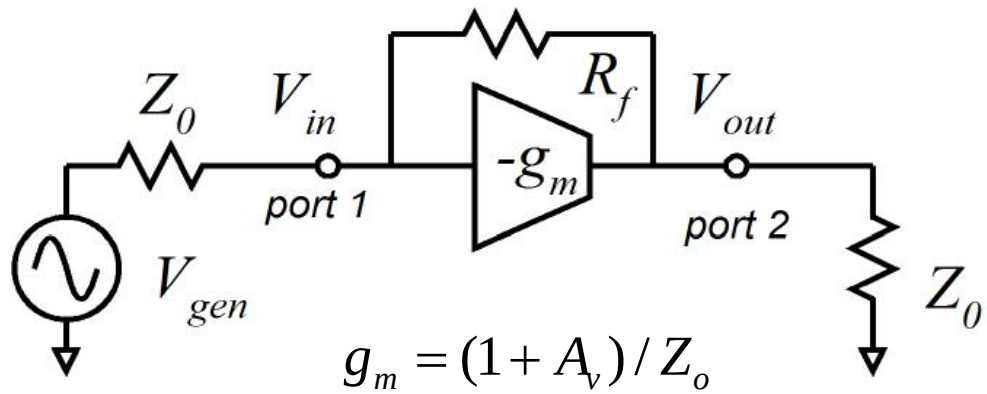

...instead of this ?

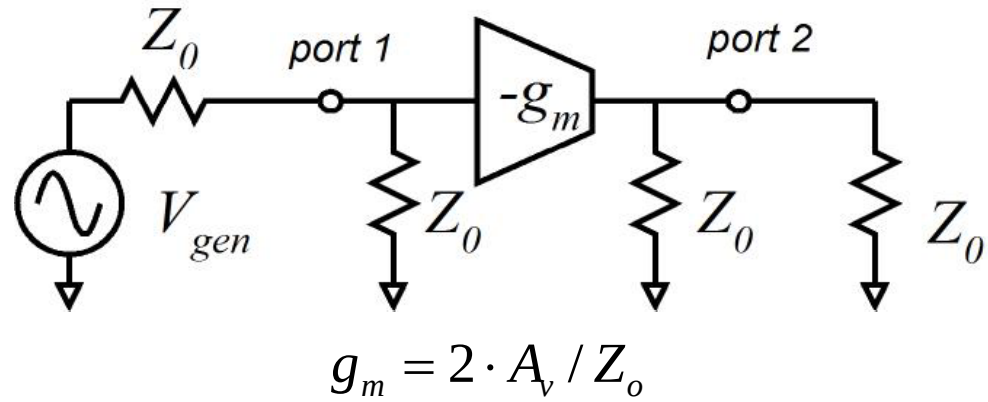

Answer : more bandwidth, less noise (noise for a later discussion).

Capacitance as the Price for Transconductance

Highly simplified device model:

$f_\tau = g_m / 2\pi C_{in}$

$\rightarrow C_{in} = g_m / 2\pi f_\tau$

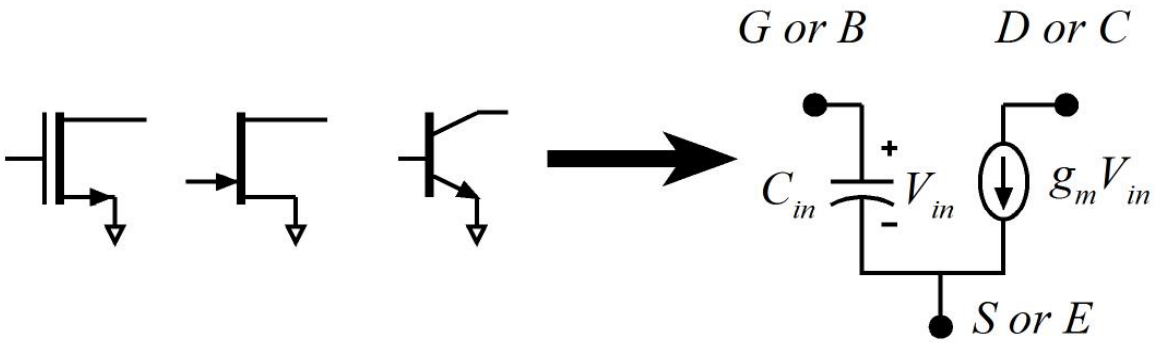

The device input capacitance C_{in} is proportional its transconductance g_m.

The feedback amplifier requires less $g_m \rightarrow$ less device C_{in}.

Capacitance as the Price for Transconductance

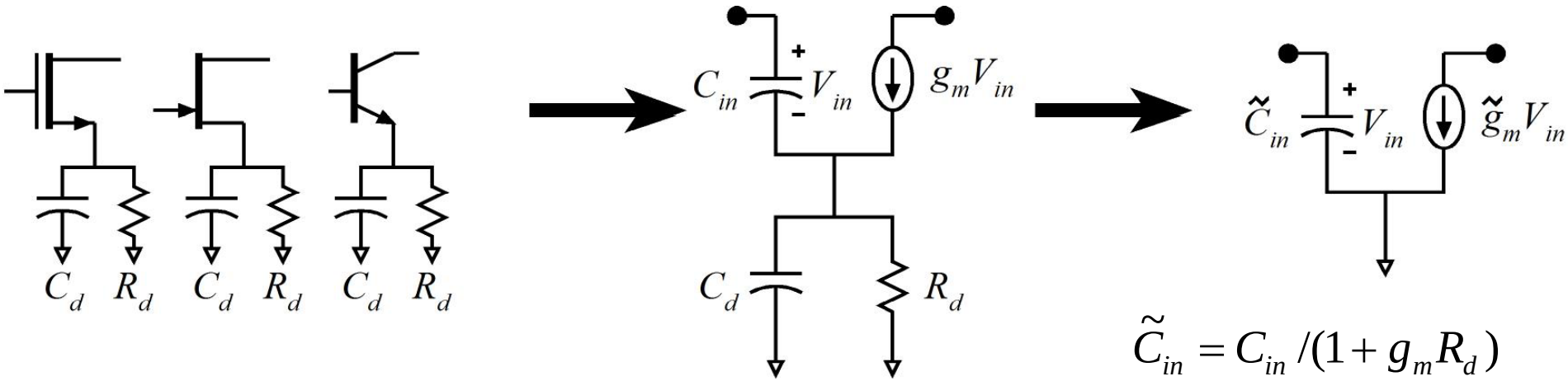

$$\tilde{C}_{in} = C_{in} / (1 + g_m R_d)$$

$$\tilde{g}_m = g_m / (1 + g_m R_d)$$

$$\rightarrow \tilde{C}_{in} = \tilde{g}_m / 2\pi f_\tau$$

Even with resistive degeneration,

input capacitance is proportional to transconductance.

(relationships from analog design review notes set)

Broadband Feedback Amplifier: Bandwidth Analysis

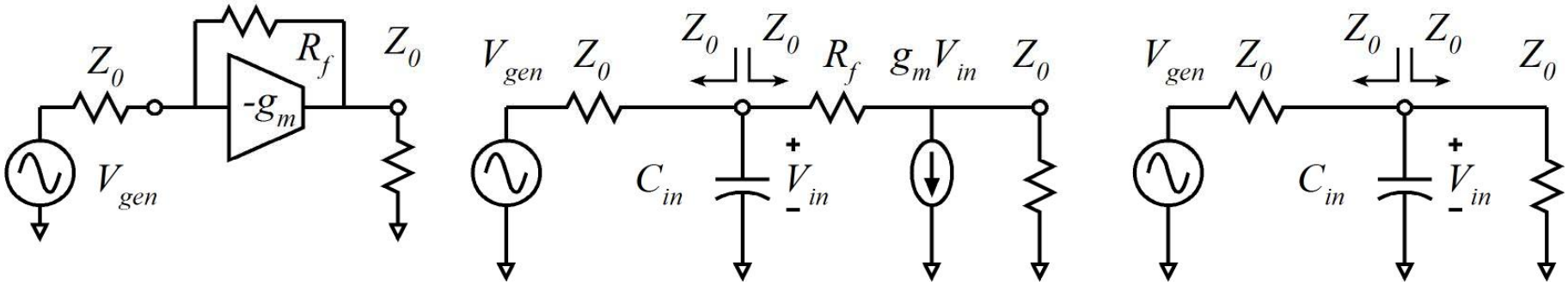

$$C_{in} = g_m / 2\pi f_\tau \text{ but } g_m = (1 + A_v)/Z_o \quad \text{so } C_{in} = (1 + A_v)/2\pi f_\tau Z_o$$

$$\text{but} \quad f_{3dB} = 1/2\pi a_1 \text{ where } a_1 = C_{in}(Z_0 \,\|\, Z_0) = C_{in} Z_0 / 2$$

$$\text{so} \quad f_{3dB} = f_\tau \frac{2}{1 + A_v}$$

$$\text{Less } g_m \text{ required} \rightarrow \text{less } C_{in} \rightarrow \text{more bandwidth}$$

Compare to Simple Resistive Amplifier

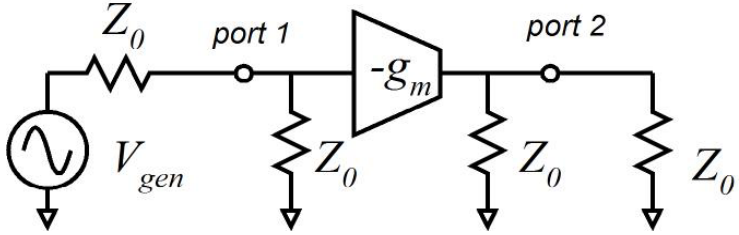

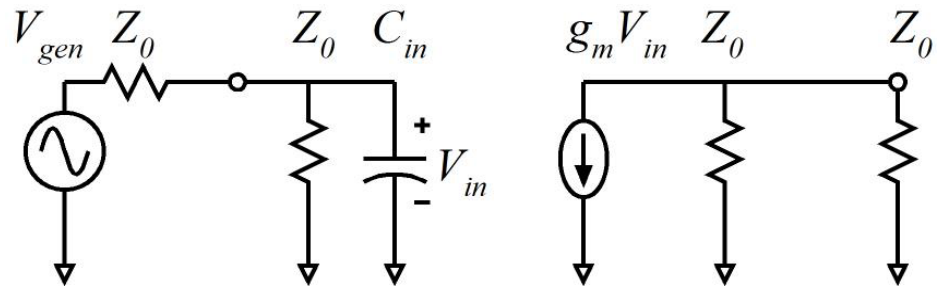

$$C_{in} = g_m / 2\pi f_\tau \text{ but } g_m = 2 \cdot A_v / Z_o \quad \text{so } C_{in} = 2 \cdot A_v / 2\pi f_\tau Z_o$$

$$\text{but} \quad f_{3dB} = 1/2\pi a_1 \text{ where } a_1 = C_{in}(Z_0 \,||\, Z_0) = C_{in} Z_0 / 2$$

$$\text{so} \quad f_{3dB} = \frac{f_\tau}{A_v}$$

$$\text{More } g_m \text{ required} \rightarrow \text{More } C_{in} \rightarrow \text{ less bandwidth}$$

Bandwidth Analysis with C_{gd} or C_{cb}

Slightly better device model:

include feedback capacitance

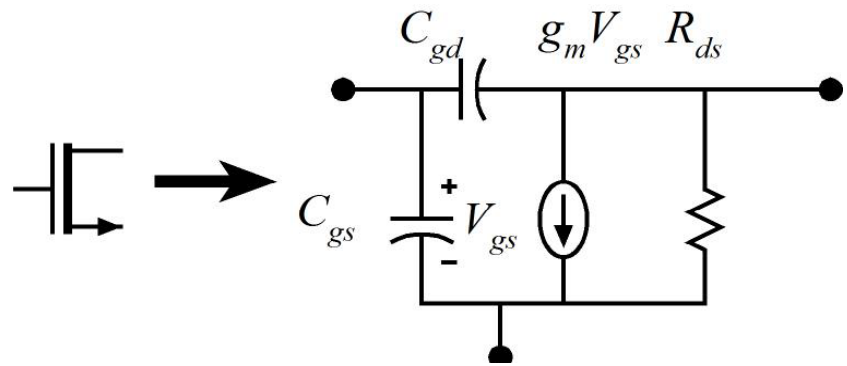

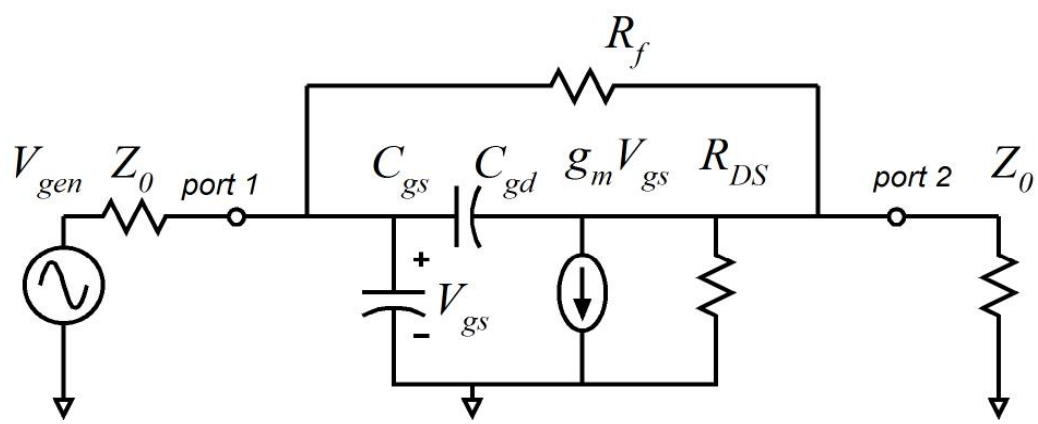

Straighforward to show by MOTC (analog notes)

$$a_1 \cong C_{gs}(Z_0/2) + C_{gd}\left(R_f \| \{Z_0(1+g_m Z_0)+Z_0\}\right)$$

$$= C_{gs}(Z_0/2) + C_{gd}\left(\{Z_0(1+A_v)\} \| \{Z_0(1+1+A_v)+Z_0\}\right)$$

$$= C_{gs}(Z_0/2) + C_{gd} Z_0 \frac{(1+A_v)(3+A_v)}{2(2+A_v)}$$