Wideband Feedback Amplifier
UCSB – ECE145A – Winter 2007

Goals:

1. Measurement of the dual feedback wideband amplifier (Minicircuits ERA-1).
2. Develop prototyping skills for RF circuits.
3. Learn to use the spectrum analyzer for measurement of power, gain compression, and harmonic distortion.
4. Understanding the concepts behind gain compression and harmonic distortion.

Precautions:

This circuit will have bias voltages on both the input and output. You MUST use DC blocking capacitors at both input and output to prevent these DC levels from being applied to either the network analyzer or spectrum analyzer. You will create very expensive damage (in the thousands of dollars) if you neglect this important requirement.

Complete the Spectrum Analyzer orientation before attempting to use this instrument.

Amplifier

This lab project involves the characterization of a wideband dual-feedback amplifier with about a 4 GHz (3 dB) bandwidth. You will have an opportunity to explore the design of a similar amplifier with less bandwidth as a homework assignment. The amplifier you will be testing is a Darlington bipolar amplifier that uses a combination of shunt and series feedback as illustrated in Chapter 2 of the Stanford notes, "Series-Shunt Feedback Amplifier Design". Sections 2-1 through 2-6 are directly relevant to this design[1]. Minicircuits also has an application note that describes the amplifier, at least superficially[2] Refer to the figure below from that app note.

The amplifier should be biased at 40 mA with 3.4 volts on the device. Use a 10V power supply. An RFC is used in series with the biasing resistor to improve the performance by reducing the loading of the output. It presents a high impedance over a wide frequency range. The RF choke is a Minicircuits ADCH-80-A. Data sheet is on the course web page.

An evaluation board will be provided. Refer to the application note and select the remaining components to bias the amplifier correctly and to obtain a lower 3 dB frequency of 10 MHz. Place the 4 spacers on each corner of the board.
The test fixture on the bottom of the board is a bonus fixture for you to use with the capacitance and inductance meter. Clip the leads to the two metal posts and place the

---

[1] H. Swain, "Series-Shunt Feedback Amplifier Design," EE344 High Frequency Laboratory, Stanford Univ., 1995. Can be found at ERES website.
[2] Minicircuits App. Note AN-60-010, "Improved ERA Amplifiers."
http://www.minicircuits.com/appnote/60010.pdf

chip C or L on the respective footprint. Since these components are not marked, it is easy to lose track of their values.

Typical biasing Configuration for Improved ERA Amplifiers

In this circuit, DC blocking capacitors are added at the input port (pin number 1 on the packaged amplifier) and at the output port (pin 3).

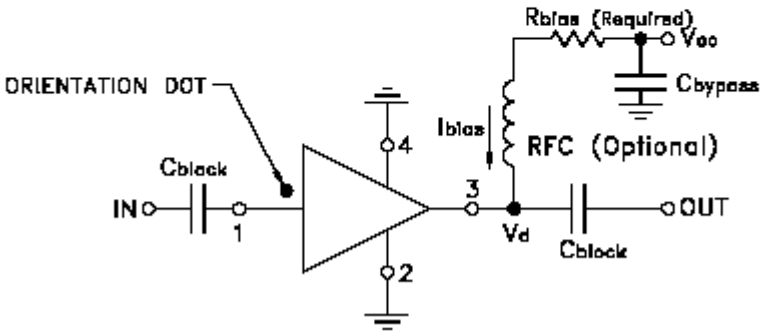

Assemble the surface mount components carefully. This requires very little solder. Attach the Male SMA board connector to the input and the Female SMA connector to the output. This will make the transmission measurement more accurate since no adapters will be necessary.

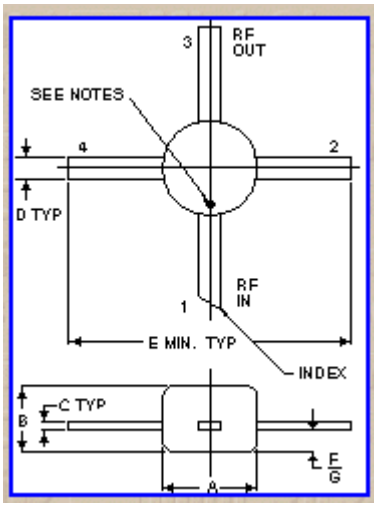

low power, up to +13.5 dBm output — all specifications at 25°C

MODEL◆ NO.	✪ FREQ. GHz f_L - f_U	GAIN, dB Typical over frequency, GHz 0.1	1	2	3	4	6	8	Min.@ 2 GHz	MAXIMUM POWER (dBm) at 2 GHz* Output (1 dB Comp.) Typ.	Min.	Input (no dmg)	DYNAMIC RANGE at 2 GHz* NF (dB) Typ.	IP3 (dBm) Typ.	VSWR (:1) Typ. In DC-3 GHz	In 3-f_U** GHz	Out DC-3 GHz	Out 3-f_U** GHz	ABSOLUTE MAX. RATING[3] I (mA)	P (mW)	DC OPERATING POWER[4] at Pin 3 Current (mA)	Device Volt. Typ	Min	Max	THERMAL RESISTANCE θjc Typ. °C/W
ERA-1	DC-8	12.3	12.1	11.8	10.9	9.7	7.9	8.2	9	12.0	10.0	15	4.3	26	1.5	1.8	1.5	1.9	75	330	40	3.4	3.0	4.1	178

Evaluation: Since there is not a lot of designing involved with this lab, your main goal is to be as careful, systematic and accurate about making measurements using the network analyzer and spectrum analyzer.

Note: Be careful not to twist the board while attaching the SMA connectors to the measurement equipment. The chip caps are easily fractured with very little bending. Check them out with the microscope after soldering and before testing to make sure they are intact.

---

1. S parameters. Use a network analyzer to evaluate the frequency response of the amplifier up to its upper 3 dB frequency. Measure all S parameters. Check the power menu to make sure that the output power level from the network analyzer is not driving the amplifier into compression during the S parameter measurement. Set the NA source power to around - 20 dBm. To do this:

Menu --> Power --> use buttons/knob to set to - 20 dBm.

2. Gain compression. Plot the Pout vs. Pin characteristic of the amplifier, and determine the input available power level at which the amplifier gain compresses by 1 dB at 400 MHz. This is called the P_{1dB} input power and is a standard index for gain compression. You may use the network analyzer power sweep to do this, or use a frequency synthesizer (generator) as the signal source and a spectrum analyzer or power meter as the detector. If you use the generator and spectrum analyzer, first calibrate your measurement setup by evaluating the loss in the cables without the amplifier in the signal path. Then, you can correct your measured amplifier data for cable losses. Describe this in the report.

3. Intermodulation distortion. The compressive gain characteristic that you plotted will generate intermodulation products due to the nonlinear transfer function. Perform a two-tone evaluation of your amplifier at 400 MHz. Use 1 MHz for the frequency separation. The power splitter is in your tool kit. Read the Minicircuits Application Note on Power Splitters on the Lab 2 web page. Note that the loss of the splitter must also be accounted for.

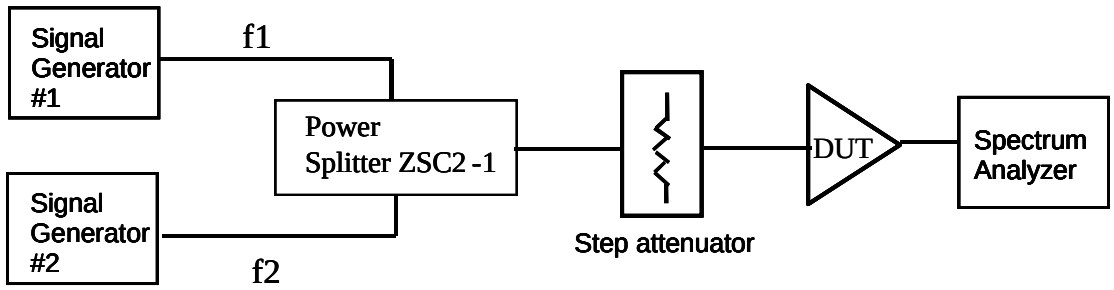

Test setup for measurement of third order IMD with two signal sources.

Use the spectrum analyzer for this measurement and plot the fundamental and third-order IMD output power (IM3) as a function of Pin. Reduce the frequency span and use a

narrow enough resolution bandwidth of the spectrum analyzer so that the intermodulation sidebands are clearly seen and that the noise floor is close to the bottom of the screen. Also make sure the fundamental signals do not exceed the spectrum analyzer reference level when measuring C-IMD behavior. The maximum input power per frequency should not be more than 13dB below your measured P1dB.

Calculate the slopes of the fundamental and IM3 and compare with theory. Calculate an input third-order intercept if possible (IIP3). Are the 3rd order sidebands both equal in amplitude?

4. Keep this amplifier. You will use it again in the next lab.

Report

This is not a design lab, but show a schematic with component values listed. Your report should be written to clearly present and interpret the measurement results. Make sure you describe how your measurement was performed and indicate important instrument setup conditions such as Resolution Bandwidth, Reference Level, Span, and Center Frequency unless they are clear from the plots. The grading will heavily weight the presentation of your results and the accuracy of your measurements. Don't make us try to guess what you did.

ECE145A	Parts Kit
1ea	ERA-1 Minicircuits Amplifier
1ea	Minicircuits ADCH-80A RF Choke
1ea	Evaluation board
2ea	board mounted SMA connectors (1 Male, 1 Female)
18"	insulated wire, #24 (red, black)
4	small metal standoffs with 4-40 or similar screw